SOUTHERN CALIFORNIA PUBLIC POWER AUTHORITY

ATTACHMENT A

13308-DY-10-A-1

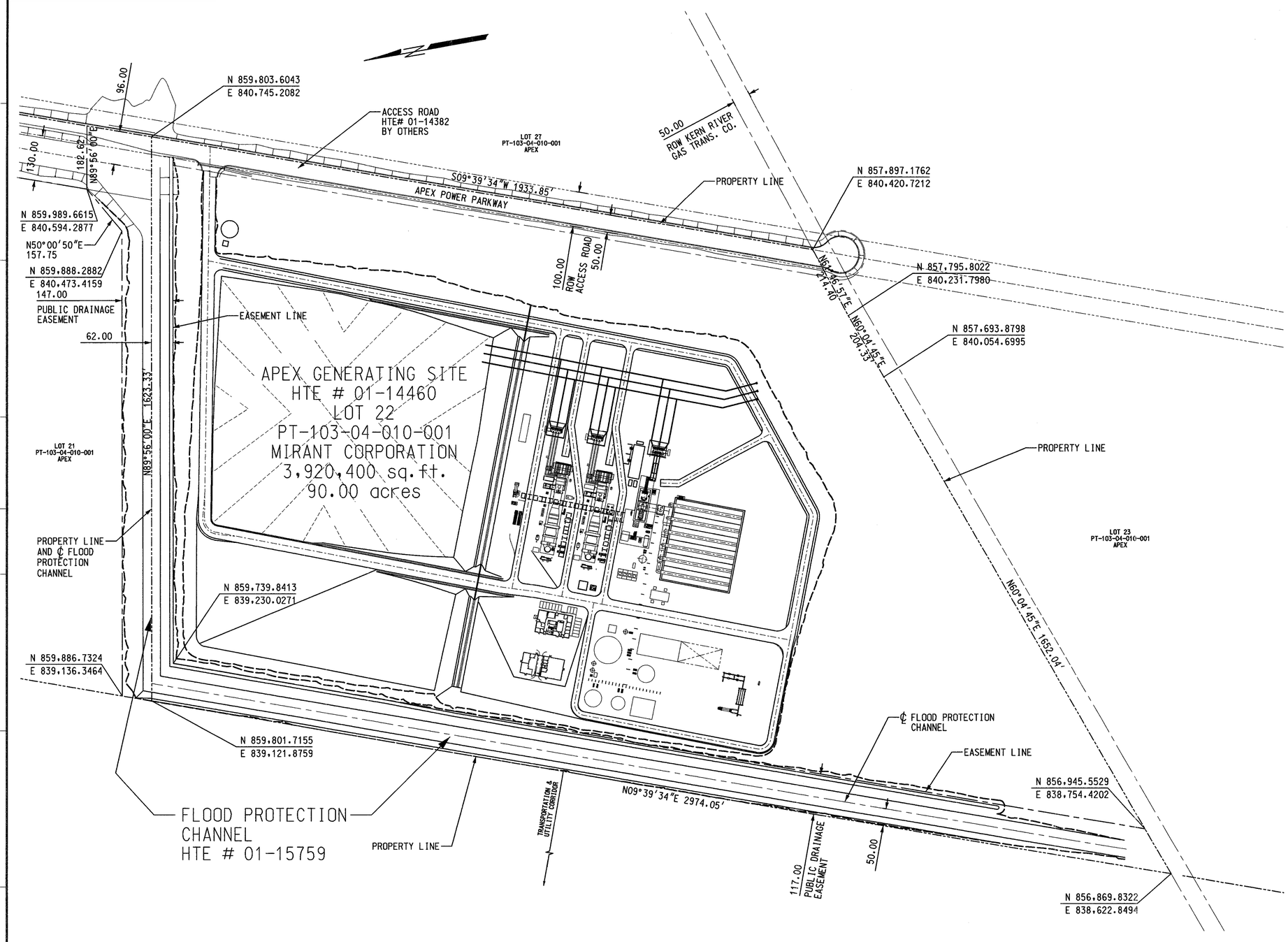

NOTES:

BENCHMARK

NATIONAL GEODETIC SURVEY (NGS) STATION: J171

ELEVATION = 734.658 METERS (PUBLISHED NGS NAVD'88)
ELEVATION = 2410.29 U.S. SURVEY FEET (PUBLISHED NGS NAVD'88)

USGLO BRASS CAP BEING THE SOUTHEAST CORNER OF THE NORTHEAST QUARTER (NE 1/4) OF SECTION 23, TOWNSHIP 18 SOUTH, RANGE 63 EAST, M.D.M., CLARK COUNTY, NEVADA AS SHOWN BY RECORD OF SURVEY FILE 87, PAGE 12, OF SURVEYS, CLARK COUNTY RECORDERS OFFICE, CLARK COUNTY NEVADA. THE RECORD ELEVATION FOR THIS CORNER IS SHOWN AS POINT NUMBER 981 ON SAID SURVEY AND WAS CHECKED FROM THE ABOVE NGS STATION AND ACCEPTED WITH THE FOLLOWING ELEVATION:

ELEVATION = 687.597 METERS =
2255.89 U.S. SURVEY FEET

0 75' 150' 300' 450'
SCALE: 1"= 150'

REVISION	DESCRIPTION	CHECKED	REVISION	DESCRIPTION	CHECKED	REVISION	1	DESCRIPTION	CHECKED	REVISION	0	DESCRIPTION	CHECKED
		CORRECT			CORRECT			ISSUED FOR CONSTRUCTION INCORPORATED REVIEW COMMENTS FROM CLARK CO PUBLIC WORKS SCANNED MAY 12 2001	CORRECT			ISSUED FOR CONSTRUCTION	PJS CORRECT JMP
		APPR DATE			APPR DATE				APPR DATE				APPR DATE RCC 5/29/01

REGISTERED PROFESSIONAL ENGINEER PETER J. SMITH CIVIL No. 6112 STATE OF NEVADA 6-12-01

APEX GENERATING STATION UNIT NO. 1

SITE PLAN

MIRANT CORPORATION
MIRANT CLARK COUNTY, NEVADA

STONE & WEBSTER A SHAW GROUP COMPANY

DRAWING NO. 13308-DY-10-A-1

DESIGNED BY R. FELT	DRAWN BY R. FELT	CAD MODEL	LEVELS	WORK PKG	PCT
DSGN CHK'D BY J. PURDY	CHK'D BY P. SMITH	DY-10-A			

RESP. ENGR:
SUP'V:

550

275

10

600

VA TECH

6 HOLES ∅7

BACKGROUND COLOUR OF VA TECH AREA TO BE IN ACCORDANCE WITH BS4800 COLOUR CODE 00 E 55 (WHITE) LETTERING - "VA" & UNDERLINE TO BE BLUE PANTONE. "TECH" TO BE IN ACCORDANCE WITH BS4800 COLOUR CODE 00 E 55 (WHITE) OUTLINED IN BLACK.

ORDER No. C00035.03
(SERIAL No. 44703)

Switch Position	Impedance Volts % (162 MVA Base)
1	9.01
2	-
3	9.05
4	-
5	9.10

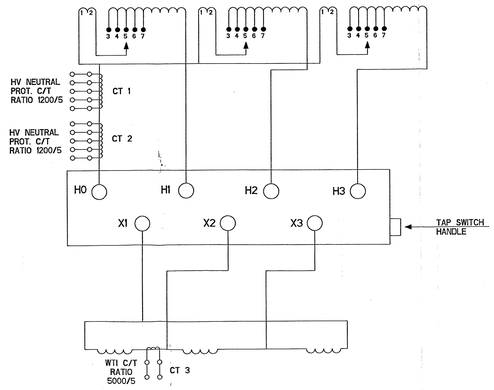

Power Transformer to ANSI C57.12.00 (2000)

Cooling Class	Rated Power (MVA)	
	H	X
ONAN	162	162
ONAF1	216	216
ONAF2	270	270

Voltage Rating 525000 GRDY / 303109 - 18000

Frequency	60 Hz
Phases	3
Average Winding Temperature Rise	55°C

Basic Lighting Impulse Levels (BIL)

High Voltage Winding (H)	1425 BIL
High Voltage Winding (H0)	150 BIL
High Voltage Winding Neutral Bushing	150 BIL
Low Voltage Winding (X)	150 BIL

Type of insulating liquid	Mineral oil
Conductor material	Copper

LETTERS TO BE CHEMICALLY ENGRAVED AND FILLED IN WITH WEATHERPROOF GLOSSY BLACK IN ACCORDANCE WITH BS4800 REF 00 E 53 (BLACK).
THE TOP SURFACE TO BE LEFT NATURAL.
SEE NOTES 2 & 3.

MARK IMPEDANCE VOLTS ONTO PLATE AS INDICATED BY ORDER.
SEE NOTES 2 & 3

Switch Position	Switch Connects	High Voltage Across H1, H2 & H3		Low Voltage Across X1, X2 & X3		Impedance Volts % (162 MVA) BASE
		Volts	Amps	Volts	Amps	
1	2-3	538125	290	18000	8660	
2	2-4	531563	294			
3	2-5	525000	297			
4	2-6	518437	301			
5	2-7	511875	305			

WARNING :- DE-ENERGIZE TRANSFORMER BEFORE OPERATING OFF-CIRCUIT TAPPING SWITCH

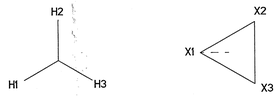

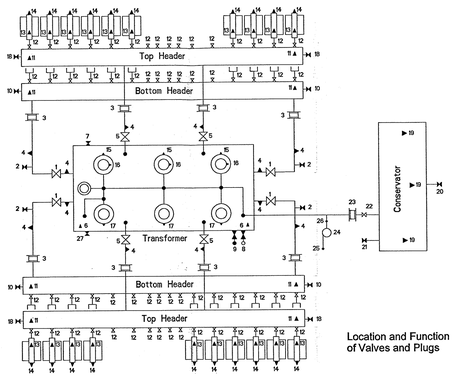

Location and Function of Valves and Plugs

NOTES :
1. MATERIAL : 1.2mm (18 SWG) ST STEEL (GRADE 316).
2. MEASURED VALUE FOR IMPEDANCE, SERIAL No. AND EQUIPMENT No. TO BE MARKED ON PLATE PRIOR TO STOVE LAQUER BEING APPLIED.
3. PLATE TO BE STOVE LAQUERED AFTER ALL MARKING HAS BEEN COMPLETED.

Oil Quantities	US Gallons	Litres	lbs	kgs
Transformer	20172	76360	144440	65517
Cooling Plant	2509	9500	17970	8151
Conservator	1094	4140	7831	3552
Total	23775	90000	170241	77220

Mass	lbs	kgs
Core and Windings	302842	137367
Complete Transformer including oil but excluding Cooling Plant	578669	262480
Cooling Plant including oil	98371	44620
Transport excluding oil	473993	215000
Untanking weight (heaviest piece)	302842	137367

WARNING

Before Applying Vacuum Treatment to Transformer, refer to Maintenance Instructions & Vacuum Capabilities

1	Transformer Tank Isolating Valve	12"	15	Turret Venting Plug	-
2	Pipework Drain/Filter Valve	2"	16	HV Bushing Oil Filling Plug	-
3	Expansion Joint	12"	17	Turret Venting Plug	-
4	Pipework Venting Plug	-	18	Radiator Header Filter Valve	2"
5	Cooler Isolating Valve	12"	19	Conservator Venting Plug	-
6	Tank Venting Plug	-	20	Conservator Processing Valve	2"
7	Tank Filtering Valve	2"	21	Conservator Draining Valve	2"
8	Tank Drain/Filter Valve with Oil Sampling Device	2"	22	Conservator Isolating Valve	3"
9	Rapid Pressure Rise Relay Isolating Valve	1.5"	23	Expansion Joint	3"
10	Radiator Header Drain/Filter Valve	2"	24	Gas Accumulation Device	-
11	Radiator Header Venting Plug	-	25	Gas Accumulation Device Sampling Valve	-
12	Radiator Isolating Valve	3"	26	Gas Accumulation Device Isolating Petcock	-
13	Radiator Venting Plug	-	27	Isolating Valve (Hydran Monitor)	2"
14	Radiator Draining Plug	-			

WARNING :- OIL FLOW PIPES MUST BE REMOVED BEFORE LIFTING TRANSFORMER FROM TANK

BOM No.	ORDER No.	SERIAL No.	EQUIPMENT No.
965020-1004	C00035.03	44703	1YXA-XM301

MARK SERIAL No. AND EQUIPMENT No. ONTO PLATE AS INDICATED BY ORDER.
SEE NOTES 2 & 3

Manufacturer : VA Tech Peebles Transformers Ltd
Manufacturers Serial No :
Year of Manufacture : 2001
Drawing No : 965001.C35.03
Purchasers Purchase Order No. : 20170567
Purchasers Equipment No. :

VA Tech Peebles Transformers Ltd
Edinburgh
EH6 7AH
Scotland

Maximum operating pressure of liquid preservation system 84 KpA (12.2 lbs/in^2)

Tank, Conservator and Cooling Plant designed for 0.01 kPa Absolute (0.001 lbs/in^2) vacuum filling

At time of shipment, this transformer contained less than 2ppm PCB's (polychlorinated biphenyls) per ASTM Method D4059.

BACKGROUND COLOUR OF VA TECH PEEBLES TRANSFORMERS LTD AREA TO BE IN ACCORDANCE WITH BS4800 COLOUR CODE 00 E 55 (WHITE).
LETTERING - "VA", UNDERLINE, "PEEBLES TRANSFORMERS LTD" etc TO BE BLUE PANTONE 2935u.
"TECH" TO BE IN ACCORDANCE WITH BS4800 COLOUR CODE 00 E 55 (WHITE) OUTLINED IN BLACK.
SEE NOTE 3.

VA TECH PEEBLES TRANSFORMERS LTD
Edinburgh, Scotland

REVISION CONTROLLED COPY

PURCHASER NAME	MIRANT CORPORATION CLARK COUNTY, NEVADA
PURCHASE ORDER No.	20170567
EQUIPMENT No.	1YXA-XM301(C00035.03 UNIT3)
DESTINATION/GENERATING PLANT NAME	APEX PROJECT, CLARK COUNTY NEVADA

PROJECTION FIRST ANGLE

VA TECH
Peebles Transformers Limited
Edinburgh EH6 7AH, SCOTLAND

This drawing and any copies of this drawing are at all times the property of VA TECH Peebles Transformers Limited. The proprietors hereby notify that it is strictly prohibited for this drawing to be copied or used for any purpose nor its contents disclosed to others without their express permission.
Copyright © 2000 VA TECH Peebles Transformers Limited.

DRAWING TITLE
RATING, DIAGRAM AND VALVE FUNCTION PLATE FOR 270 MVA 525/18kV 3PH 60Hz GENERATOR TRANSFORMER

REVISION		NAME	DATE
1	DRAWING REVISED BY	R.BLAKE	21.01.02
	REVISION CHECKED BY	J.MOFFAT	21.01.02
	REVISION APPROVED BY	-	-
2	DRAWING REVISED BY		
	REVISION CHECKED BY		
	REVISION APPROVED BY		
3	DRAWING REVISED BY		
	REVISION CHECKED BY		
	REVISION APPROVED BY		
4	DRAWING REVISED BY		
	REVISION CHECKED BY		
	REVISION APPROVED BY		
5	DRAWING REVISED BY		
	REVISION CHECKED BY		
	REVISION APPROVED BY		
6	DRAWING REVISED BY		
	REVISION CHECKED BY		
	REVISION APPROVED BY		
7	DRAWING REVISED BY		
	REVISION CHECKED BY		
	REVISION APPROVED BY		
8	DRAWING REVISED BY		
	REVISION CHECKED BY		
	REVISION APPROVED BY		

WEIGHTS AND OIL QUANTITIES UPDATED.
No. OFF RADIATORS WERE 28 NOW 20.
IMPEDANCE FIGURES ADDED.
PURCHASERS ORDER AND EQUIPMENT Nos. ADDED.

MODIFICATION

REFERENCE DRAWINGS
OUTLINE ARRANGEMENT - 961400.C35.03

ORIGINAL SCALE : 1:1
SHEET : 1 OF 1
SHEET SIZE A0
DRAWING FILENAME: 965001.C35.03

	NAME	DATE
DRAWN BY	D.MORTON	22-06-01
DRAWING CHECKED BY	R.BLAKE	28-06-01
DRAWING APPROVED BY	R.BLAKE	28-06-01
DESIGN APPROVED BY	I.MACKAY	02-07-01

DRAWING NUMBER 965001.C35.03
REVISION 1

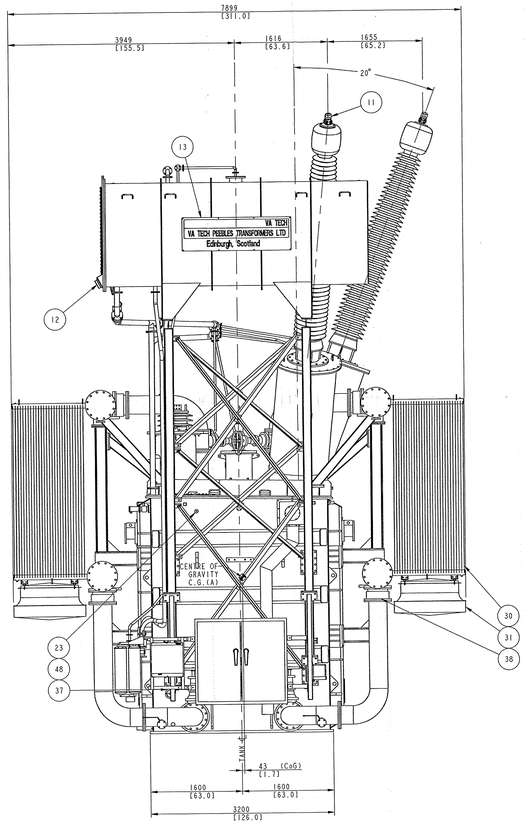

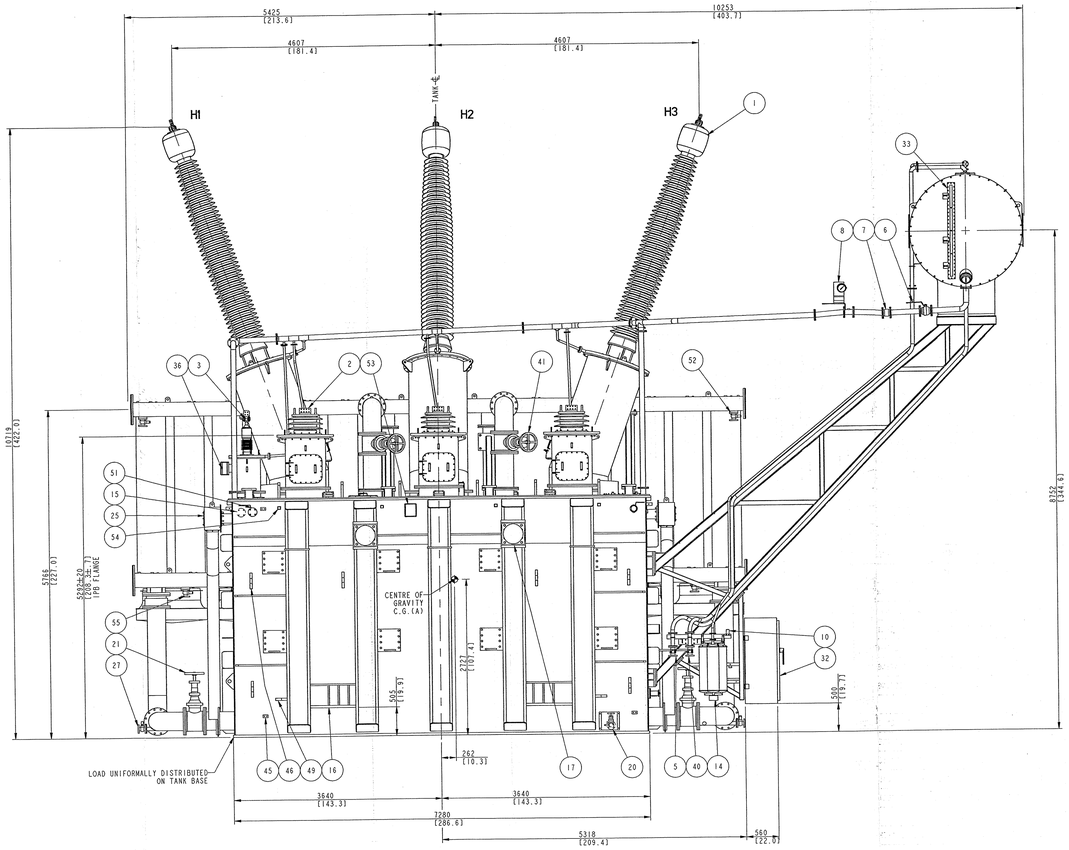

- RADIATOR BANK REMOVED FOR CLARITY -

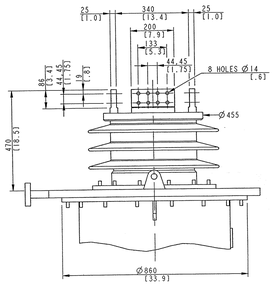

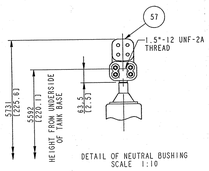

DETAIL OF NEUTRAL BUSHING
SCALE 1:10

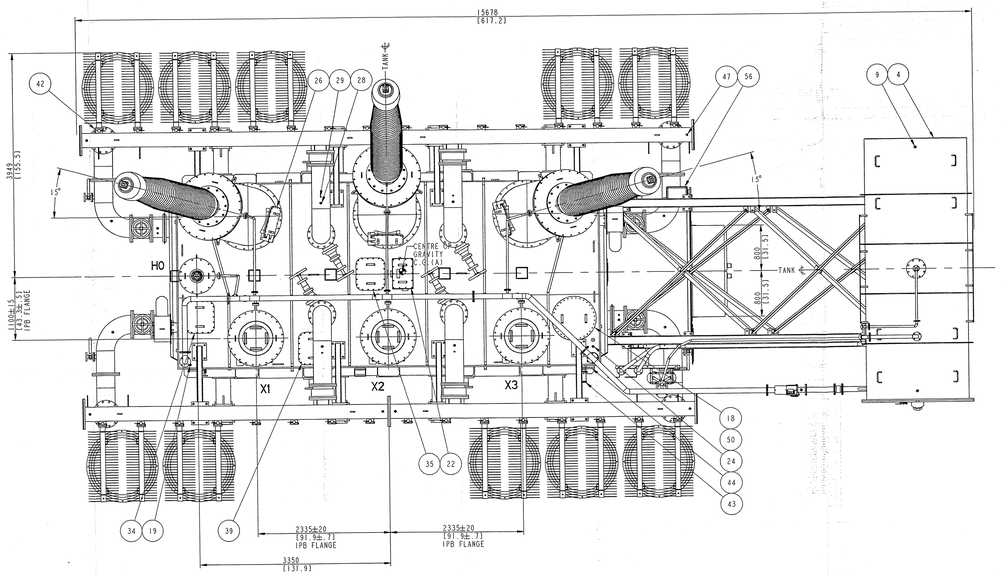

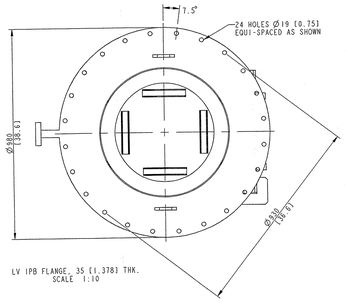

LV IPB FLANGE, 35 [1.378] THK.
SCALE 1:10

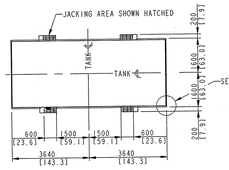

VIEW SHOWING JACKING POSITIONS
SCALE 1:100

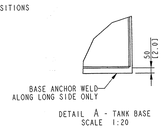

DETAIL A - TANK BASE
SCALE 1:20

PART NO.	QUANTITY	DESCRIPTION	IF REMOVED FOR TRANSPORT
1	3	HV BUSHING 550 kV 800 AMP, TRENCH LTD:- 500HC651	YES
2	3	LV BUSHING 25 kV 12500 AMP, TRENCH :- 20HC545	YES
3	1	NEUTRAL BUSHING 25 kV 700 AMP, TRENCH :- 0250001 D	YES
4	1	CONSERVATOR WITH RUBBER DIAPHRAGM AND REMOVABLE END COVER	YES
5	1	CONSERVATOR DRAIN VALVE 2" (BALL TYPE)	YES
6	1	CONSERVATOR ISOLATING VALVE 3" (BALL TYPE)	YES
7	1	EXPANSION JOINT 3" BROCKINGTONS & SCOTT LTD. - M6145	YES
8	1	GAS ACCUMULATION INDICATOR QUALITROL - 038-007-01	YES
9	3	CONSERVATOR VENTING PLUGS	NO
10	1	GAS ACCUMULATION INDICATOR SAMPLING VALVE ASSEMBLY QUALITROL	YES
11	3	NEMA 4-HOLE FIXING PAD - (HV BUSHING CONNECTION) - SEFCOR TYPE ASNFHV-54-4B	YES
12	1	CONSERVATOR OIL LEVEL GAUGE WITH TWO LOW OIL LEVEL ALARMS QUALITROL - 042 SERIES	NO
13	2	VA TECH PEEBLES TRANSFORMERS NAMEPLATE	NO
14	1	SILICA GEL BREATHER HAWKE - HB777	YES
15	1	TANK FILTER VALVE 2" (BALL TYPE) (HV SIDE)	NO
16	4	TANK JACKING LUGS	NO
17	4	REMOVABLE LIFTING BOLLARDS (REMOVED TO MEET RAIL LOADING GAUGE)	YES
18	-	MANHOLE & HANDHOLE COVERS	NO
19	2	TANK VENTING PLUG (1-EACH END)	NO
20	1	TANK DRAIN / FILTER VALVE (WITH OIL SAMPLING DEVICE AND FITTED COVER) 2" (GLOBE TYPE)	YES
21	4	TRANSFORMER TANK ISOLATING VALVE 12" (WEDGE GATE TYPE)	YES
22	1	CORE GROUNDING LINK BOX	NO
23	1	RTD SENSOR QUALITROL - 103-015-01-CS3169T-2	YES
24	2	TANK THERMOMETER POCKET (1-EACH END)	NO
25	2	PRESSURE RELIEF DEVICE WITH DOWNPIPE QUALITROL 208-002-4 WITH TRIPPING SWITCH	YES
26	3	HV BUSHING CONNECTION ACCESS HANDHOLE	NO
27	4	PIPEWORK DRAIN/FILTER VALVE 2" (BALL TYPE)	NO
28	10	PIPEWORK VENTING PLUGS	NO
29	8	THERMOMETER POCKET (PIPEWORK)	NO
30	20	RADIATORS (WITH VENTING AND DRAIN PLUGS) MENK	YES
31	10	COOLING FANS (Ø1000 mm) SCHORMANN - SH1000-8	YES
32	1	MARSHALLING CUBICLE	YES
33	1	PRISMATIC OIL LEVEL GAUGE INDICATING OIL LEVELS 110, -20 & 25 °C	NO
34	1	ACCESS COVER TO NEUTRAL BUSHING CONNECTION	NO
35	1	ACCESS COVER TO CORE EARTH TERMINALS	NO
36	1	NEUTRAL BUSHING C/T TERMINAL BOX	NO
37	1	OFF-CIRCUIT TAPCHANGER OPERATING HANDLE (PADLOCKABLE) ATL 305/500A 250 LSP	NO
38	8	EXPANSION JOINT 12" BROCKINGTON & SCOTT LTD. - M52133	YES
39	1	ACCESS COVER TO WTI C/T	NO
40	1	CONSERVATOR PROCESS VALVE 2" (BALL TYPE)	YES
41	4	COOLER ISOLATING VALVE 12" (WEDGE GATE TYPE)	YES
42	64	RADIATOR ISOLATING VALVE 3" (CAMLOCK WELD-IN TYPE)	NO
43	1	RAPID PRESSURE RISE RELAY QUALITROL 900-010	YES
44	1	RAPID PRESSURE RISE RELAY ISOLATING VALVE 1.5" (BALL TYPE)	NO
45	4	GROUNDING PADS	NO
46	12	TRANSPORT HOLDING DOWN LUGS WITH Ø57 mm (2.24") HOLES	NO
47	8	RADIATOR HEADER VENTING PLUGS	NO
48	1	RATING, DIAGRAM & VALVE FUNCTION PLATE	NO
49	4	HAULAGE LUGS WITH Ø80 mm (3.2") HOLES	NO
50	1	WTI THERMOWELL	NO
51	1	ISOLATING VALVE 2" (BALL VALVE) (FOR FUTURE FITTING OF HYDRAN ON-LINE MONITOR)	NO
52	4	RADIATOR HEADER FILTER VALVE 2" (BALL TYPE)	NO
53	1	WTI C/T TERMINAL OUTLET BOX	NO
54	12	GUARDRAIL CLEATS THE SOUTHERN COMPANY, DWG NO. PT04-07	NO
55	4	RADIATOR HEADER DRAIN/FILTER VALVE 2" (BALL TYPE)	NO
56	1	DRY-TYPE TRANSFORMER SQUARE TYPE COMPANY	YES
57	1	NEMA 4-HOLE FIXING PAD - (NEUTRAL BUSHING CONNECTION) - SEFCOR TYPE ASNFHV-44-4B	YES
58			

NOTES:-
1) PRIMARY DIMENSIONS ARE SHOWN IN METRIC (mm) UNITS, SECONDARY DIMENSIONS ARE SHOWN IN IMPERIAL [INCH] UNITS.
2) UNLESS OTHERWISE STATED ALL DIMENSIONS ARE ROUNDED TO THE NEAREST WHOLE NUMBER.
3) ALL DEVICES ARE PRE-WIRED TO MARSHALLING CUBICLE (ITEM 32).
4) ALL MANHOLE, HANDHOLE AND INSPECTION COVERS ARE PROVIDED WITH HANDLES.
5) ALL VALVES ARE LOCKABLE AND ARE FITTED WITH POSITION INDICATORS.
6) PROTECTIVE SHIELDS ARE FITTED ON VALVES (3" AND BELOW) NEAR GROUND LEVEL.
7) DRAIN AND FILTER VALVES ARE FITTED WITH BLANKING PLATES.
8) PAINT FINISH COLOUR, ANSI LIGHT GRAY (NO. 70).
9) HV AND NEUTRAL BUSHINGS SUPPLIED WITH NEMA 4 HOLE PAD FOR OUTDOOR CONNECTION.
10) ONE SET OF HOSE ADAPTORS SUPPLIED LOOSE PER CONTRACT.
11) C.G.(S) INDICATES CENTRE OF GRAVITY FOR SHIPPING UNIT.
C.G.(A) INDICATES CENTRE OF GRAVITY FOR ASSEMBLED UNIT.

REVISION CONTROLLED COPY

TRANSPORT WEIGHT	385808 LBS.	175000 KGS.
TOTAL WEIGHT (OIL FILLED)	677040 LBS.	307100 KGS.
OIL QUANTITY	23775 USG.	90000 LITRES

PURCHASER NAME	MIRANT CORPORATION CLARK COUNTY, NEVADA.
PURCHASE ORDER NUMBER	20170567
EQUIPMENT NUMBER	IYXA - XM301 (C00035_03 UNIT 3)
DESTINATION/GENERATING PLANT NAME	APEX PROJECT, CLARK COUNTY, NEVADA.

PROJECTION FIRST ANGLE

VA TECH
Peebles Transformers
Limited
Edinburgh EH6 7AH, SCOTLAND

This drawing and any copies of this drawing are at all times the property of VA TECH Peebles Transformers Limited. The proprietors hereby notify that it is strictly prohibited for this drawing to be copied or used for any purpose nor its contents disclosed to others without their express permission.
Copyright © 2008 VA TECH Peebles Transformers Limited.

DRAWING TITLE
OUTLINE ARRANGEMENT FOR 270 MVA, 525/18 kV 3-PH, 60 HZ, ONAN/ONAF/ONAF COOLED GENERATOR TRANSFORMER

REVISION		NAME	DATE
1	DRAWING REVISED BY	J.MOFFAT	05.06.01
	REVISION CHECKED BY	J.MOFFAT	05.06.01
	REVISION APPROVED BY		

MODIFICATION: TITLE ALTERED (WAS ALTERNATIVE OUTLINE)

REVISION		NAME	DATE
2	DRAWING REVISED BY	C.TENNANT	02.07.01
	REVISION CHECKED BY	R.BLAKE	02.07.01
	REVISION APPROVED BY	R.BLAKE	02.07.01

MODIFICATION: DRAWING REVISED

REVISION		NAME	DATE
3	DRAWING REVISED BY	C.TENNANT	26.09.01
	REVISION CHECKED BY	R.BLAKE	27.10.01
	REVISION APPROVED BY	R.BLAKE	27.10.01

MODIFICATION: DRAWING UPDATED.
EQUIPMENT NUMBER ADDED.
SHEET 2 ADDED.
WEIGHTS, CoG & OIL QUANTITES REVISED.
ITEM 30 WAS 28-OFF NOW 24-OFF.
ITEM 31 WAS 14-OFF NOW 12-OFF.

REVISION		NAME	DATE
4	DRAWING REVISED BY	C.TENNANT	27.11.01
	REVISION CHECKED BY	R.BLAKE	27.11.01
	REVISION APPROVED BY	R.BLAKE	27.11.01

MODIFICATION: ITEM 3 WAS REF. 3-40410545, NOW 0250001 D.
NOTE 11 ADDED.
C.G.(A) INDICATED ON CoG NOTES.

REVISION		NAME	DATE
5	DRAWING REVISED BY	P.G.A.FERRI	18-01-02
	REVISION CHECKED BY	J.MOFFAT	18-01-02
	REVISION APPROVED BY	J.MOFFAT	19-01-02

MODIFICATION: 1-FAN REMOVE FROM EACH SIDE
1-PAIR OF RADIATORS REMOVED FROM EACH SIDE, RATING PLATE RE-POSITIONED.
WEIGHTS AND OIL QUANTITIES REVISED.

REVISION		NAME	DATE
6	DRAWING REVISED BY		
	REVISION CHECKED BY		
	REVISION APPROVED BY		

MODIFICATION:

REVISION		NAME	DATE
7	DRAWING REVISED BY		
	REVISION CHECKED BY		
	REVISION APPROVED BY		

MODIFICATION:

REVISION		NAME	DATE
8	DRAWING REVISED BY		
	REVISION CHECKED BY		
	REVISION APPROVED BY		

MODIFICATION:

REFERENCE DRAWINGS
TRANSPORT ARRANGEMENT - 821400_C35_03

		NAME	DATE
DRAWN BY		C.TENNANT	25.05.01
DRAWING CHECKED BY		J.MOFFAT	25.05.01
DRAWING APPROVED BY		J.MOFFAT	25.05.01
DESIGN APPROVED BY		I.MACKAY	25.05.01

ORIGINAL SCALE : 2:75
SHEET + 1 OF 2
SHEET SIZE A0
DRAWING FILENAME: 961400_C35_03

DRAWING NUMBER 961400_C35_03
REVISION 5

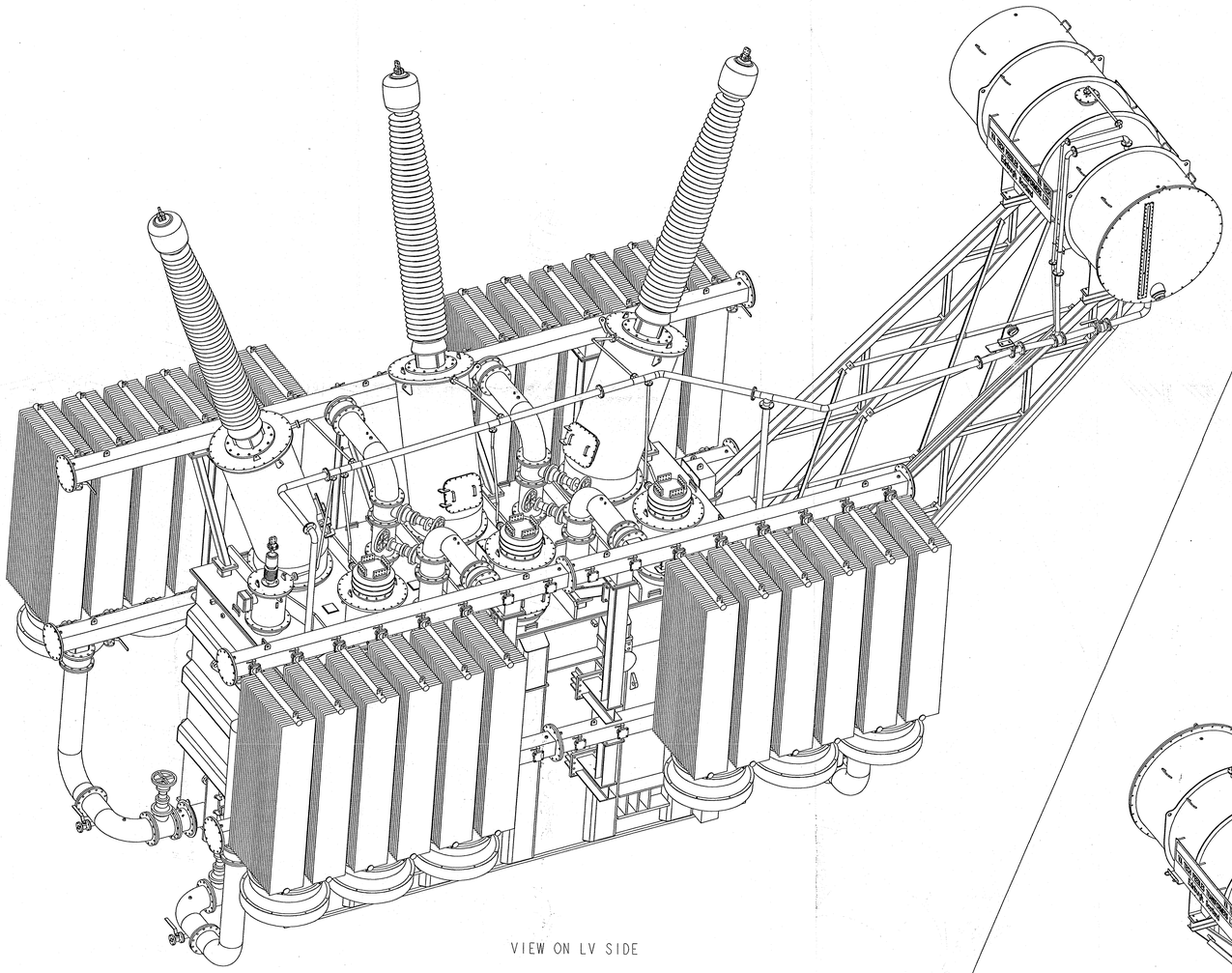

VIEW ON LV SIDE

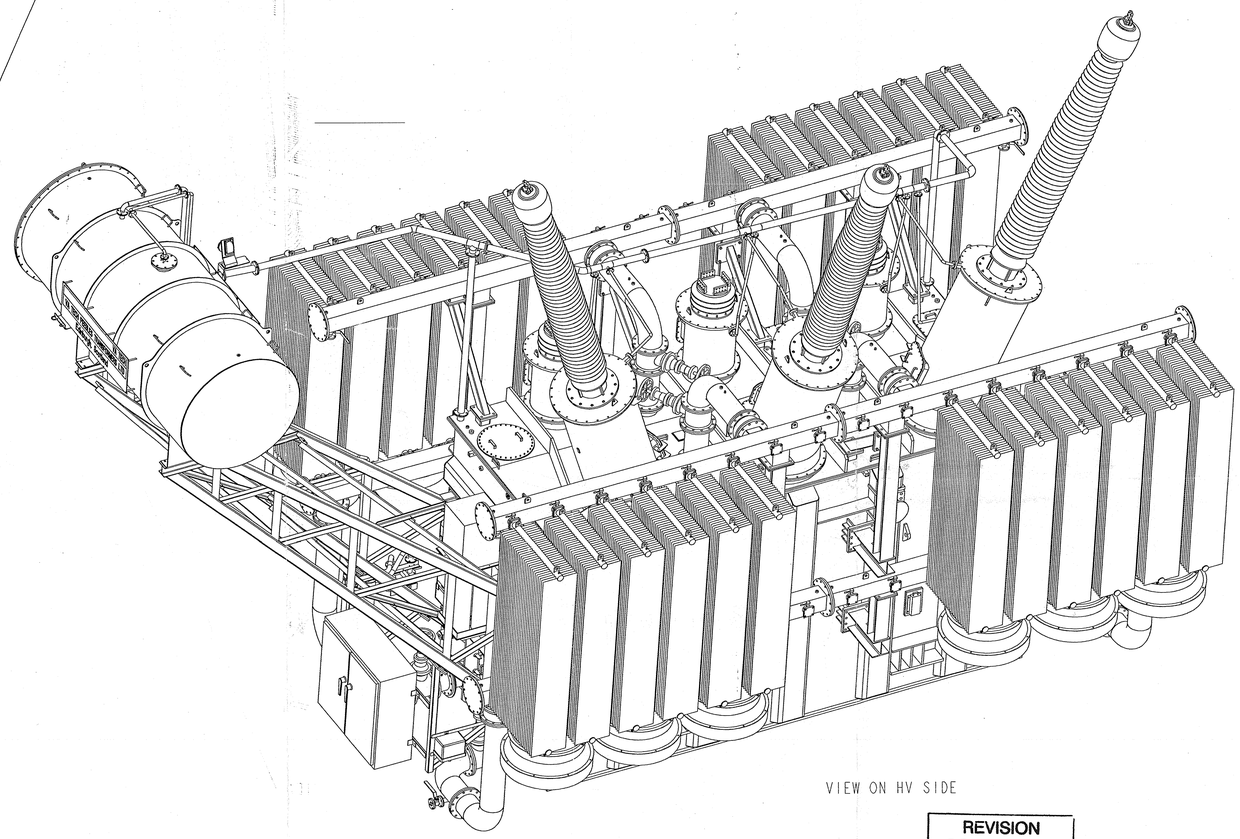

VIEW ON HV SIDE

REVISION CONTROLLED COPY

		NAME	DATE
REVISION 1	DRAWING REVISED BY		
	REVISION CHECKED BY		
	REVISION APPROVED BY		
MODIFICATION			

		NAME	DATE
REVISION 2	DRAWING REVISED BY		
	REVISION CHECKED BY		
	REVISION APPROVED BY		
MODIFICATION			

		NAME	DATE
REVISION 3	DRAWING REVISED BY		
	REVISION CHECKED BY		
	REVISION APPROVED BY		
MODIFICATION			

		NAME	DATE
REVISION 4	DRAWING REVISED BY		
	REVISION CHECKED BY		
	REVISION APPROVED BY		
MODIFICATION			

		NAME	DATE
REVISION 5	DRAWING REVISED BY		
	REVISION CHECKED BY		
	REVISION APPROVED BY		
MODIFICATION			

		NAME	DATE
REVISION 6	DRAWING REVISED BY		
	REVISION CHECKED BY		
	REVISION APPROVED BY		
MODIFICATION			

		NAME	DATE
REVISION 7	DRAWING REVISED BY		
	REVISION CHECKED BY		
	REVISION APPROVED BY		
MODIFICATION			

		NAME	DATE
REVISION 8	DRAWING REVISED BY		
	REVISION CHECKED BY		
	REVISION APPROVED BY		
MODIFICATION			

PROJECTION FIRST ANGLE

VA TECH
Peebles Transformers
Limited
Edinburgh EH6 7AH, SCOTLAND

This drawing and any copies of this drawing are at all times the property of VA TECH Peebles Transformers Limited. The proprietors hereby notify that it is strictly prohibited for this drawing to be copied or used for any purpose nor its contents disclosed to others without their express permission.
Copyright © 2001 VA TECH Peebles Transformers Limited.

DRAWING TITLE

OUTLINE ARRANGEMENT FOR 270 MVA, 525/18 kV 3-PH, 60 HZ, ONAN/ONAF/ONAF COOLED GENERATOR TRANSFORMER

REFERENCE DRAWINGS

TRANSPORT ARRANGEMENT - 821400_C35_03

	NAME	DATE
DRAWN BY	C.TENNANT	11.10.01
DRAWING CHECKED BY	R.BLAKE	27.10.01
DRAWING APPROVED BY	R.BLAKE	27.10.01
DESIGN APPROVED BY	I.MACKAY	27.10.01

ORIGINAL SCALE : 1:30
SHEET 1 OF 2
SHEET SIZE A0
DRAWING FILENAME: 961400_C35_03

DRAWING NUMBER 961400_C35_03

REVISION 0

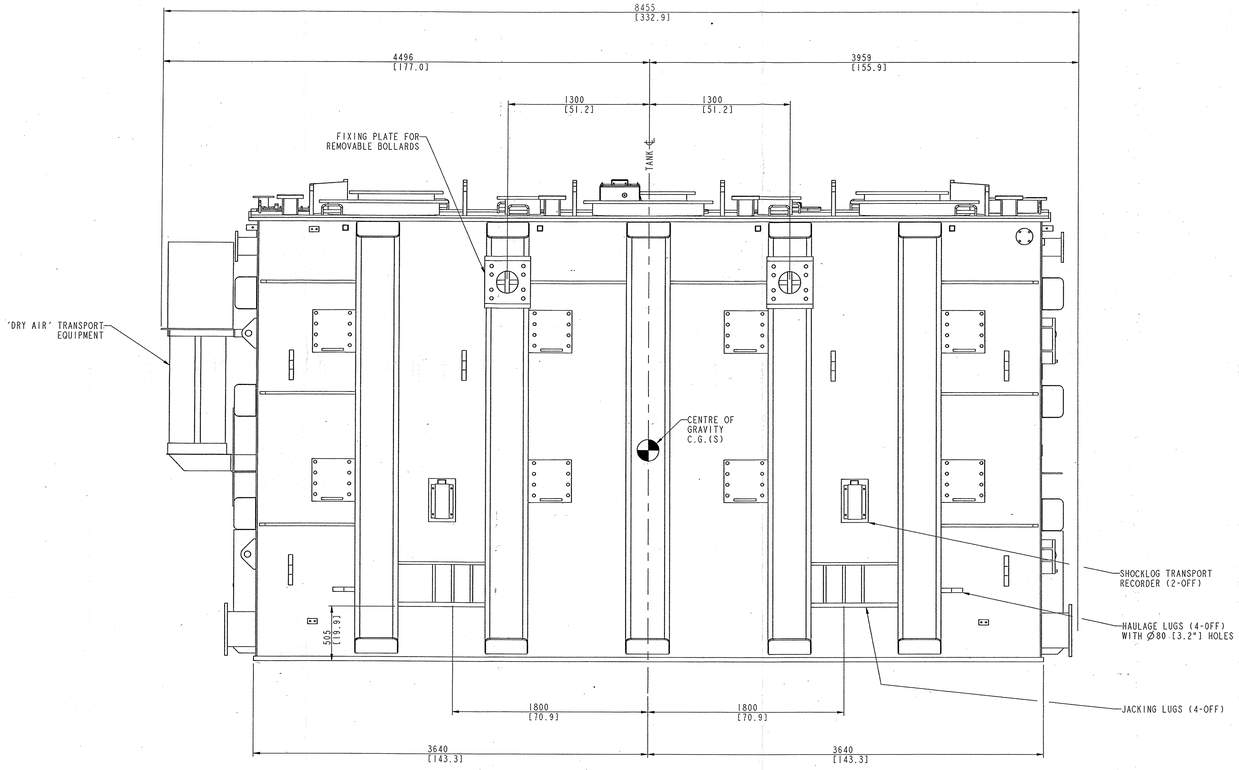

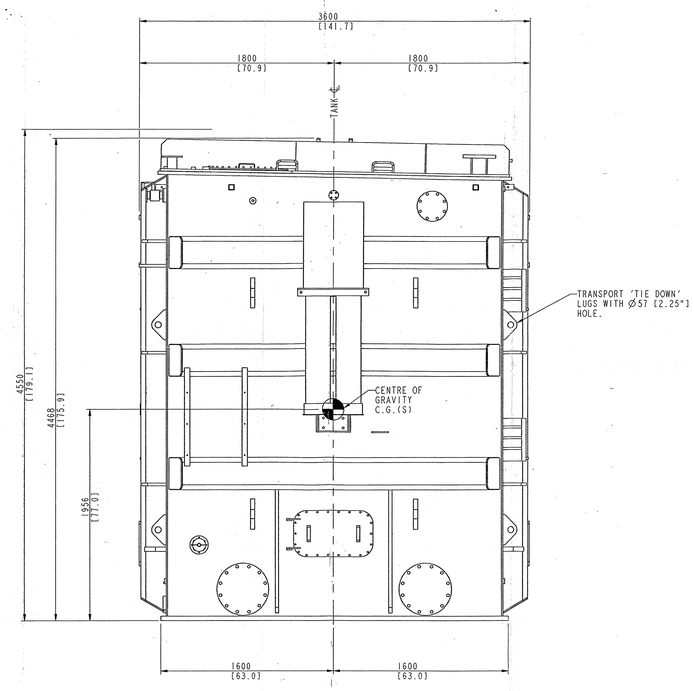

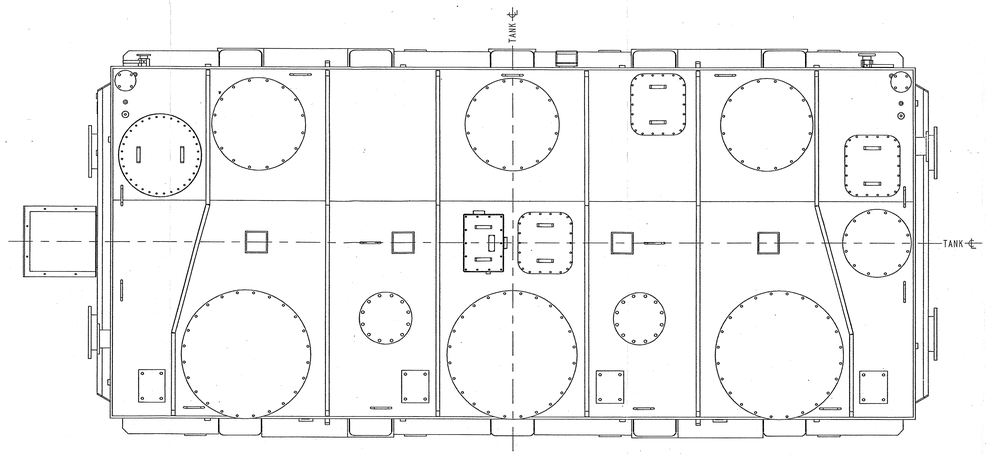

NOTES:-

1. PRIMARY DIMENSIONS ARE SHOWN IN METRIC (mm) UNITS, SECONDARY DIMENSIONS ARE SHOWN IN IMPERIAL [inch] UNITS.

2. C.G.(S) INDICATES CENTRE OF GRAVITY FOR SHIPPING UNIT. C.G.(A) INDICATES CENTRE OF GRAVITY FOR ASSEMBLED UNIT.

TRANSPORT WEIGHT - 160000 kgs [352740 lbs]

REVISION CONTROLLED COPY

PURCHASER NAME	MIRANT CORPORATION COUNTY CLARK, NEVADA.
PURCHASE ORDER NUMBER	20170567
EQUIPMENT NUMBER	1YXA-XM101 (C00035_01 UNIT 1) 1YXA-XM201 (C00035_02 UNIT 2)
DESTINATION/GENERATING PLANT NAME	APEX PROJECT, CLARK COUNTY, NEVADA.

PROJECTION FIRST ANGLE

VA TECH
Peebles Transformers Limited
Edinburgh EH6 7AH, SCOTLAND

This drawing and any copies of this drawing are at all times the property of VA TECH Peebles Transformers Limited. The proprietors hereby notify that it is strictly prohibited for this drawing to be copied or used for any purpose nor its contents disclosed to others without their express permission. Copyright © 2001 VA TECH Peebles Transformers Limited.

DRAWING TITLE

TRANSPORT ARRANGEMENT FOR 215 MVA, 525/18 kV 3-PHASE, 60 HZ, OA/FA/FA COOLED GENERATOR TRANSFORMER

REVISION		NAME	DATE
1	DRAWING REVISED BY	C.TENNANT	08.07.01
	REVISION CHECKED BY	R.BLAKE	08.07.01
	REVISION APPROVED BY	R.BLAKE	08.07.01

MODIFICATION: LIFTING BOLLARD CENTRES WAS 2300mm NOW 1300mm. TANK BASE PLATE WAS 7380 x 3236mm. TANK JACKING AREA HEIGHT FROM BASE WAS 450mm NOW 500mm.

REVISION		NAME	DATE
2	DRAWING REVISED BY	C.TENNANT	19.09.01
	REVISION CHECKED BY	R.BLAKE	02.10.01
	REVISION APPROVED BY	R.BLAKE	02.10.01

MODIFICATION: DRAWING REVISED. EQUIPMENT NUMBERS ADDED. LENGTH OF TRANSPORT ASSEMBLY WAS 8400mm, NOW 8455mm.

REVISION		NAME	DATE
3	DRAWING REVISED BY	C.TENNANT	26.11.01
	REVISION CHECKED BY	R.BLAKE	26.11.01
	REVISION APPROVED BY	R.BLAKE	26.11.01

MODIFICATION: NOTE 2 ADDED. C.G.(S) INDICATED ON CoG NOTES. SHOCKLOG RECORDER ADDED, NOW 2-OFF.

REVISION		NAME	DATE
4	DRAWING REVISED BY		
	REVISION CHECKED BY		
	REVISION APPROVED BY		

MODIFICATION:

REVISION		NAME	DATE
5	DRAWING REVISED BY		
	REVISION CHECKED BY		
	REVISION APPROVED BY		

MODIFICATION:

REVISION		NAME	DATE
6	DRAWING REVISED BY		
	REVISION CHECKED BY		
	REVISION APPROVED BY		

MODIFICATION:

REVISION		NAME	DATE
7	DRAWING REVISED BY		
	REVISION CHECKED BY		
	REVISION APPROVED BY		

MODIFICATION:

REVISION		NAME	DATE
8	DRAWING REVISED BY		
	REVISION CHECKED BY		
	REVISION APPROVED BY		

MODIFICATION:

REFERENCE DRAWINGS

OUTLINE ARRANGEMENT - 961400.C35.01

ORIGINAL SCALE : 1:20	SHEET SIZE	A0
SHEET + 1 OF 1		
DRAWING FILENAME: 821400.C35.01		

	NAME	DATE
DRAWN BY	C.TENNANT	22.05.01
DRAWING CHECKED BY	J.MOFFAT	24.05.01
DRAWING APPROVED BY	J.MOFFAT	24.05.01
DESIGN APPROVED BY	I.MACKAY	24.05.01

DRAWING NUMBER 821400_C35_01

REVISION 3

550

275

10

600

VA TECH

6 HOLES ∅7

BACKGROUND COLOUR OF VA TECH AREA TO BE IN ACCORDANCE WITH BS4800 COLOUR CODE 00 E 55 (WHITE) LETTERING - "VA" & UNDERLINE TO BE BLUE PANTONE. "TECH" TO BE IN ACCORDANCE WITH BS4800 COLOUR CODE 00 E 55 (WHITE) OUTLINED IN BLACK.

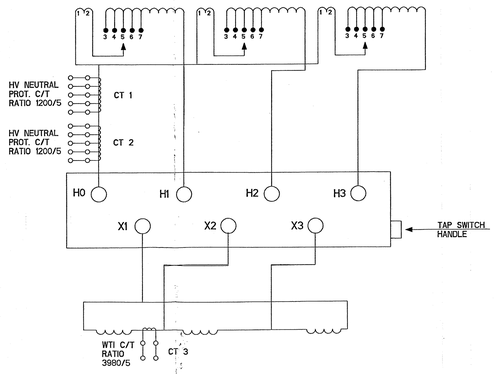

Power Transformer to ANSI C57.12.00 (2000)

Cooling Class	Rated Power (MVA)	
	H	X
ONAN	129	129
ONAF1	172	172
ONAF2	215	215

Voltage Rating 525000 GRDY / 303109 - 18000

Frequency	60 Hz
Phases	3
Average Winding Temperature Rise	55°C

Basic Lightning Impulse Levels (BIL)

High Voltage Winding (H)	1425 BIL
High Voltage Winding (H0)	150 BIL
High Voltage Winding Neutral Bushing	150 BIL
Low Voltage Winding (X)	150 BIL

Oil Quantities	US Gallons	Litres	lbs	kgs
Transformer	20883	79050	149528	67825
Cooling Plant	1691	6400	12106	5491
Conservator	1070	4050	7661	3475
Total	23644	89500	169295	76791

Mass	lbs	kgs
Core and Windings	265981	120647
Complete Transformer including oil but excluding Cooling Plant	545846	247592
Cooling Plant including oil	58220	26408
Transport excluding oil	352739	160000
Untanking weight (heaviest piece)	265981	120647

Type of insulating liquid	Mineral oil
Conductor material	Copper

ORDER No. C00035.01
(SERIAL No.44701)

Switch Position	Impedance Volts % (129 MVA Base)
1	8.48
2	-
3	8.52
4	-
5	8.60

ORDER No. C00035.02
(SERIAL No.44702)

Switch Position	Impedance Volts % (129 MVA Base)
1	8.52
2	-
3	8.54
4	-
5	8.64

LETTERS TO BE CHEMICALLY ENGRAVED AND FILLED IN WITH WEATHERPROOF GLOSSY BLACK IN ACCORDANCE WITH BS4800 REF 00 E 53 (BLACK).
THE TOP SURFACE TO BE LEFT NATURAL.
SEE NOTES 2 & 3.

MARK IMPEDANCE VOLTS ONTO PLATE AS INDICATED BY ORDER.
SEE NOTES 2 & 3

Switch Position	Switch Connects	High Voltage Across H1, H2 & H3		Low Voltage Across X1, X2 & X3		Impedance Volts % (129 MVA Base)
		Volts	Amps	Volts	Amps	
1	2-3	538125	231	18000	6896	
2	2-4	531563	234			
3	2-5	525000	236			
4	2-6	518437	239			
5	2-7	511875	243			

WARNING :- DE-ENERGIZE TRANSFORMER BEFORE OPERATING OFF-CIRCUIT TAPPING SWITCH

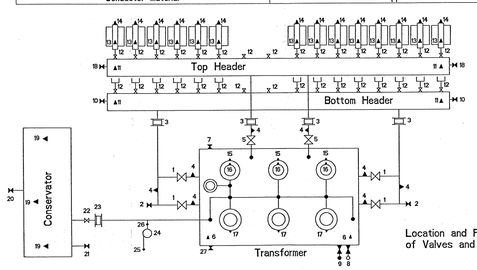

Location and Function of Valves and Plugs

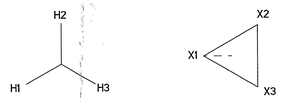

BOM No.	ORDER No.	SERIAL No.	EQUIPMENT No.
965020-1003	C00035.01	44701	1YXA-XM101
965021-1003	C00035.02	44702	1YXA-XM201

MARK SERIAL No. AND EQUIPMENT No. ONTO PLATE AS INDICATED BY ORDER.
SEE NOTES 2 & 3

Manufacturer : VA Tech Peebles Transformers Ltd
Manufacturers Serial No. :
Year of Manufacture : 2001
Drawing No : 965001.C35.01

VA Tech Peebles Transformers Ltd
Edinburgh
EH6 7AH
Scotland

Purchasers Purchase Order No. : 20170567
Purchasers Equipment No. :

Maximum operating pressure of liquid preservation system 84 KpA (12.2 lbs/in^2)

Tank, Conservator and Cooling Plant designed for 0.01 kPa Absolute (0.001 lbs/in^2) vacuum filling

At time of shipment, this transformer contained less than 2ppm PCB's (polychlorinated biphenyls) per ASTM Method D4059.

WARNING

Before Applying Vacuum Treatment to Transformer, refer to Maintenance Instructions & Vacuum Capabilities

1	Transformer Tank Isolating Valve	12"	15	Turret Venting Plug	-
2	Pipework Drain/Filter Valve	2"	16	HV Bushing Oil Filling Plug	-
3	Expansion Joint	12"	17	Turret Venting Plug	-
4	Pipework Venting Plug	-	18	Radiator Header Filter Valve	2"
5	Cooler Isolating Valve	12"	19	Conservator Venting Plug	-
6	Tank Venting Plug	-	20	Conservator Processing Valve	2"
7	Tank Filtering Valve	2"	21	Conservator Draining Valve	2"
8	Tank Drain/Filter Valve with Oil Sampling Device	2"	22	Conservator Isolating Valve	3"
9	Rapid Pressure Rise Relay Isolating Valve	1.5"	23	Expansion Joint	3"
10	Radiator Header Drain/Filter Valve	2"	24	Gas Accumulation Device	-
11	Radiator Header Venting Plug	-	25	Gas Accumulation Device Sampling Valve	-
12	Radiator Isolating Valve	3"	26	Gas Accumulation Device Isolating Petcock	-
13	Radiator Venting Plug	-	27	Isolating Valve (Hydran Monitor)	2"
14	Radiator Draining Plug	-			

WARNING :- OIL FLOW PIPES MUST BE REMOVED BEFORE LIFTING TRANSFORMER FROM TANK

NOTES :
1. MATERIAL : 1.2mm (18 SWG) ST STEEL (GRADE 316).
2. MEASURED VALUE FOR IMPEDANCE, SERIAL No. AND EQUIPMENT No. TO BE MARKED ON PLATE PRIOR TO STOVE LAQUER BEING APPLIED.
3. PLATE TO BE STOVE LAQUERED AFTER ALL MARKING HAS BEEN COMPLETED.

BACKGROUND COLOUR OF VA TECH PEEBLES TRANSFORMERS LTD AREA TO BE IN ACCORDANCE WITH BS4800 COLOUR CODE 00 E 55 (WHITE). LETTERING - "VA", UNDERLINE, "PEEBLES TRANSFORMERS LTD" etc TO BE BLUE PANTONE 2935u. "TECH" TO BE IN ACCORDANCE WITH BS4800 COLOUR CODE 00 E 55 (WHITE) OUTLINED IN BLACK. SEE NOTE 3.

VA TECH PEEBLES TRANSFORMERS LTD

Edinburgh, Scotland

REVISION CONTROLLED COPY

PURCHASER NAME	MIRANT CORPORATION CLARK COUNTY, NEVADA
PURCHASE ORDER No.	20170567
EQUIPMENT No.	1YXA-XM101 (C00035.01 UNIT1) 1YXA-XM201 (C00035.02 UNIT2)
DESTINATION/ GENERATING PLANT NAME	APEX PROJECT, CLARK COUNTY NEVADA

PROJECTION: FIRST ANGLE

VA TECH
Peebles Transformers Limited
Edinburgh EH6 7AH, SCOTLAND

This drawing and any copies of this drawing are at all times the property of VA TECH Peebles Transformers Limited. The proprietors hereby notify that it is strictly prohibited for this drawing to be copied or used for any purpose nor its contents disclosed to others without their express permission. Copyright © 2000 VA TECH Peebles Transformers Limited.

DRAWING TITLE
RATING DIAGRAM AND VALVE FUNCTION PLATE FOR 215 MVA 525/18kv 3PH 60Hz GENERATOR TRANSFORMER

	NAME	DATE
REVISION 1		
DRAWING REVISED BY	R.BLAKE	18.01.02.
REVISION CHECKED BY	J.MOFFAT	18.01.02.
REVISION APPROVED BY	-	

MODIFICATION 1: WEIGHTS AND OIL QUANTITIES UPDATED. No. OFF RADIATORS WERE 16 OFF NOW 14 OFF. EQUIPMENT Nos. ADDED. IMPEDANCE FIGURES ADDED.

REVISION 2 / REVISION 3 / REVISION 4 / REVISION 5 / REVISION 6 / REVISION 7 / REVISION 8: DRAWING REVISED BY / REVISION CHECKED BY / REVISION APPROVED BY — NAME / DATE

REFERENCE DRAWINGS: OUTLINE ARRANGEMENT - 961400.C35.01

ORIGINAL SCALE : 1:1
SHEET : 1 OF 1
SHEET SIZE A0
DRAWING FILENAME: 965001.C35.01

	NAME	DATE
DRAWN BY	D.MORTON	21-06-01
DRAWING CHECKED BY	R.BLAKE	28-06-01
DRAWING APPROVED BY	R.BLAKE	28-06-01
DESIGN APPROVED BY	I.MACKAY	02-07-01

DRAWING NUMBER 965001.C35.01
REVISION 1

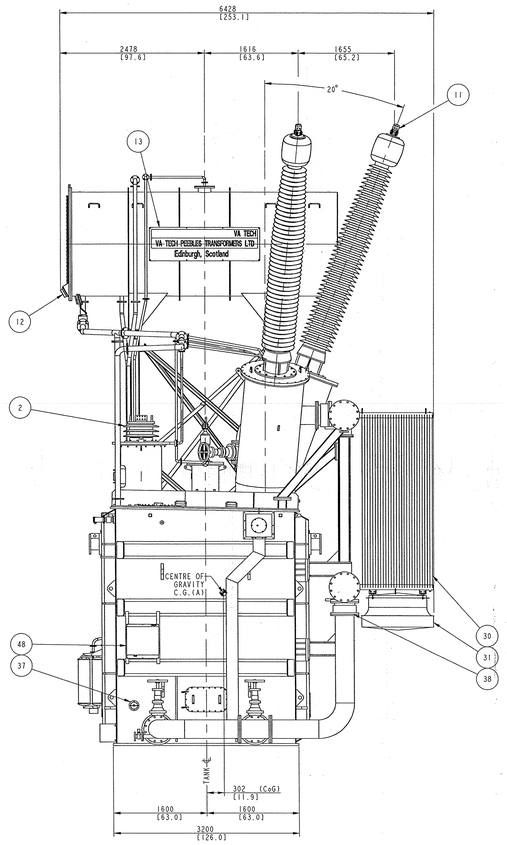

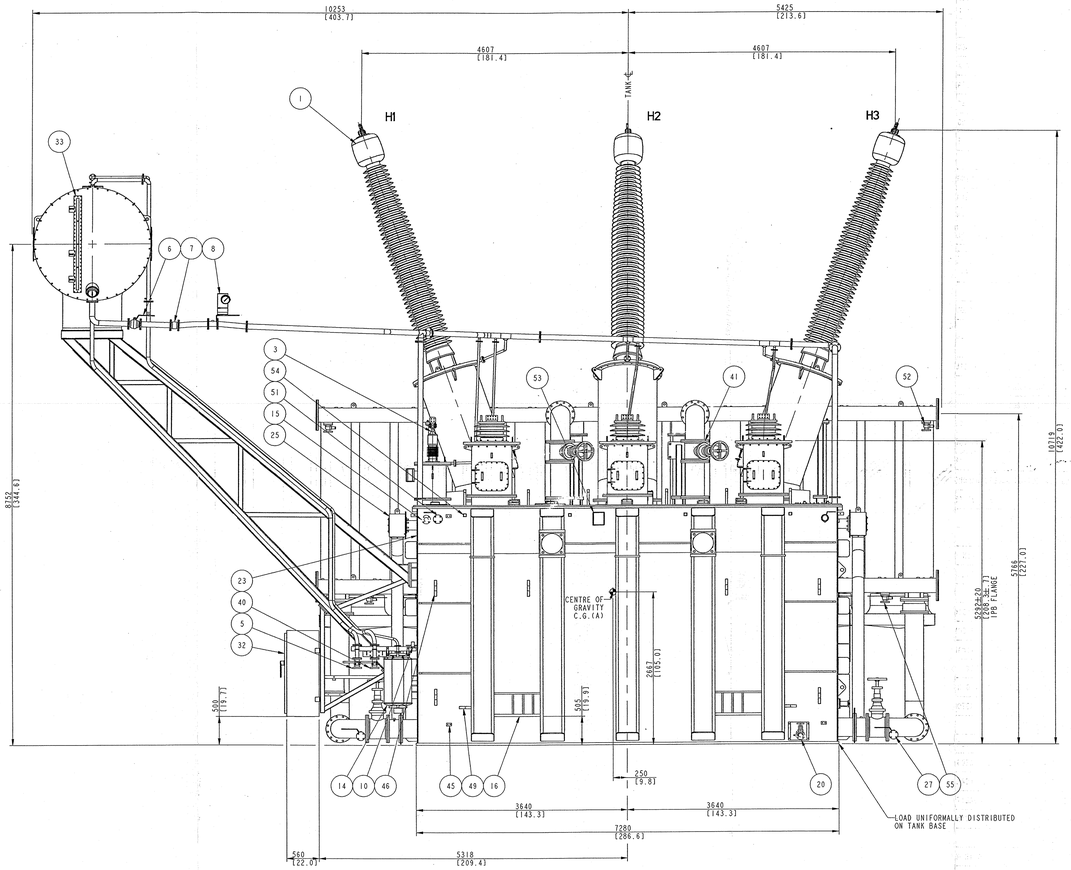

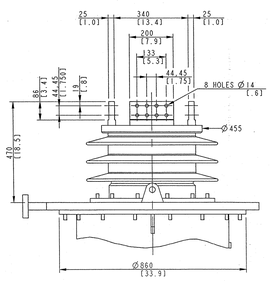

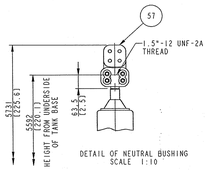

DETAIL OF NEUTRAL BUSHING
SCALE 1:10

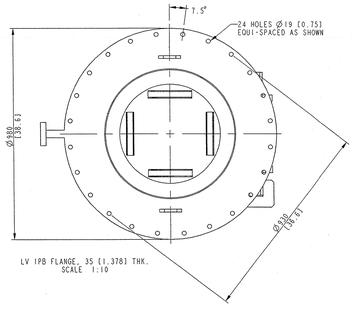

LV IPB FLANGE, 35 [1.378] THK.
SCALE 1:10

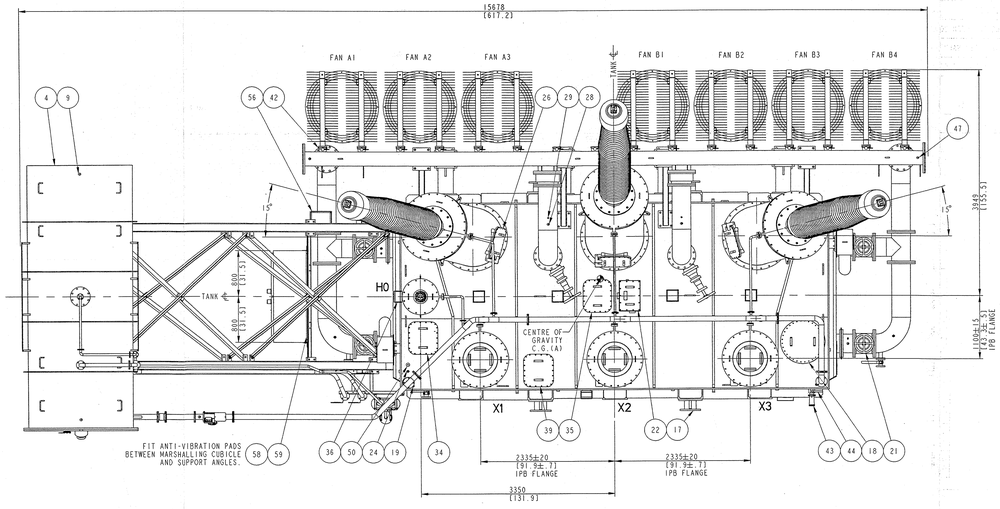

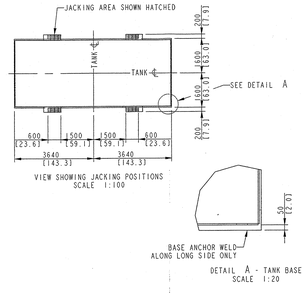

VIEW SHOWING JACKING POSITIONS
SCALE 1:100

DETAIL A - TANK BASE
SCALE 1:20

PART NO.	QUANTITY	DESCRIPTION	IF REMOVED FOR TRANSPORT
1	3	HV BUSHING 550 kV 800 AMP, TRENCH :- 500HC651	YES
2	3	LV BUSHING 25 kV 12500 AMP, TRENCH :- 20HC545	YES
3	1	NEUTRAL BUSHING 25 kV 700 AMP, TRENCH :- 025D001 D	YES
4	1	CONSERVATOR WITH RUBBER DIAPHRAGM AND REMOVABLE END COVER	YES
5	1	CONSERVATOR DRAIN VALVE 2" (BALL TYPE)	YES
6	1	CONSERVATOR ISOLATING VALVE 3" (BALL TYPE)	YES
7	1	EXPANSION JOINT 3" BROCKINGTONS & SCOTT LTD. - M6145	YES
8	1	GAS ACCUMULATION INDICATOR QUALITROL - 038-007-01	YES
9	3	CONSERVATOR VENTING PLUGS	NO
10	1	GAS ACCUMULATION INDICATOR SAMPLING VALVE ASSEMBLY QUALITROL	YES
11	3	NEMA 4-HOLE FIXING PAD - (HV BUSHING CONNECTION) - SEFCOR TYPE ASNFHV-54-4B	YES
12	1	CONSERVATOR OIL LEVEL GAUGE WITH TWO LOW OIL LEVEL ALARMS QUALITROL - 042 SERIES	NO
13	2	VA TECH PEEBLES TRANSFORMERS NAMEPLATE	NO
14	1	SILICA GEL BREATHER HAWKE - HB777	YES
15	1	TANK FILTER VALVE 2" (BALL TYPE) (HV SIDE)	NO
16	4	TANK JACKING LUGS	NO
17	4	REMOVABLE LIFTING BOLLARDS (REMOVED TO MEET RAIL LOADING GAUGE)	YES
18	-	MANHOLE & HANDHOLE COVERS	NO
19	2	TANK VENTING PLUG (1-EACH END)	NO
20	1	TANK DRAIN / FILTER VALVE (WITH OIL SAMPLING DEVICE AND FITTED COVER) 2" (GLOBE TYPE)	YES
21	4	TRANSFORMER TANK ISOLATING VALVE 12" (WEDGE GATE TYPE)	YES
22	1	CORE GROUNDING LINK BOX	NO
23	1	RTD SENSOR QUALITROL - 103-015-01-CS31697-2	YES
24	2	TANK THERMOMETER POCKET (1-EACH END)	NO
25	2	PRESSURE RELIEF DEVICE WITH DOWNPIPE QUALITROL 208-002-4 WITH TRIPPING SWITCH	YES
26	3	HV BUSHING CONNECTION ACCESS HANDHOLE	NO
27	2	PIPEWORK DRAIN/FILTER VALVE 2" (BALL TYPE)	NO
28	8	PIPEWORK VENTING PLUGS	NO
29	6	THERMOMETER POCKET (PIPEWORK)	NO
30	14	RADIATORS (WITH VENTING AND DRAIN PLUGS) MENK	YES
31	7	COOLING FANS (Ø1000 mm) SCHORMANN - SH1000-8	YES
32	1	MARSHALLING CUBICLE	YES
33	1	PRISMATIC OIL LEVEL GAUGE INDICATING OIL LEVELS 110, -20 & 25 °C	NO
34	1	ACCESS COVER TO NEUTRAL BUSHING CONNECTION	NO
35	1	ACCESS COVER TO CORE EARTH TERMINALS	NO
36	1	NEUTRAL BUSHING C/T TERMINAL BOX	NO
37	1	OFF-CIRCUIT TAPCHANGER OPERATING HANDLE (PADLOCKABLE) ATL 305/500A 250 LSP	NO
38	4	EXPANSION JOINT 12" BROCKINGTON & SCOTT LTD. - M52133	YES
39	1	ACCESS COVER TO WTI C/T	NO
40	1	CONSERVATOR PROCESS VALVE 2" (BALL TYPE)	YES
41	2	COOLER ISOLATING VALVE 12" (WEDGE GATE TYPE)	YES
42	32	RADIATOR ISOLATING VALVE 3" (CAMLOCK WELD-IN TYPE)	NO
43	1	RAPID PRESSURE RISE RELAY QUALITROL 900-010	YES
44	1	RAPID PRESSURE RISE RELAY ISOLATING VALVE 1.5" (BALL TYPE)	NO
45	4	GROUNDING PADS	NO
46	12	TRANSPORT HOLDING DOWN LUGS WITH Ø57 mm [2.24"] HOLES	NO
47	4	RADIATOR HEADER VENTING PLUGS	NO
48	1	RATING, DIAGRAM & VALVE FUNCTION PLATE	NO
49	4	HAULAGE LUGS WITH Ø80 mm [3.2"] HOLES	NO
50	1	WTI THERMOWELL	NO
51	1	ISOLATING VALVE 2" (BALL VALVE) (FOR FUTURE FITTING OF HYDRAN ON-LINE MONITOR)	NO
52	2	RADIATOR HEADER FILTER VALVE 2" (BALL TYPE)	NO
53	1	WTI C/T TERMINAL OUTLET BOX	NO
54	12	GUARDRAIL CLEATS THE SOUTHERN COMPANY, DWG NO. PT04-07	NO
55	2	RADIATOR HEADER DRAIN/FILTER VALVE 2" (BALL TYPE)	NO
56	1	DRY-TYPE TRANSFORMER SQUARE D COMPANY	YES
57	1	NEMA 4-HOLE FIXING PAD - (NEUTRAL BUSHING CONNECTION) - SEFCOR TYPE ASNFHV-44-4B	YES
58	2	ANTI-VIBRATION STRIP 25 x 1500 x 12.5 THK. (001212-2512)	YES
59	2	ANTI-VIBRATION STRIP 25 x 1500 x 3 THK. (001214-2503)	YES

NOTES:-
1) PRIMARY DIMENSIONS ARE SHOWN IN METRIC (mm) UNITS, SECONDARY DIMENSIONS ARE SHOWN IN IMPERIAL (INCH) UNITS.
2) UNLESS OTHERWISE STATED ALL DIMENSIONS ARE ROUNDED TO THE NEAREST WHOLE NUMBER.
3) ALL DEVICES ARE PRE-WIRED TO MARSHALLING CUBICLE (ITEM 32).
4) ALL MANHOLE, HANDHOLE AND INSPECTION COVERS ARE PROVIDED WITH HANDLES.
5) ALL VALVES ARE LOCKABLE AND ARE FITTED WITH POSITION INDICATORS.
6) PROTECTIVE SHIELDS ARE FITTED ON VALVES (3" AND BELOW) NEAR GROUND LEVEL.
7) DRAIN AND FILTER VALVES ARE FITTED WITH BLANKING PLATES
8) PAINT FINISH COLOUR, ANSI SKY GRAY (NO. 70).
9) HV AND NEUTRAL BUSHINGS SUPPLIED WITH NEMA 4 HOLE PAD FOR CUSTOMER CONNECTION.
10) ONE SET OF HOSE ADAPTORS SUPPLIED LOOSE PER CONTRACT.
11) C.G.(S) INDICATES CENTRE OF GRAVITY FOR SHIPPING UNIT.
C.G.(A) INDICATES CENTRE OF GRAVITY FOR ASSEMBLED UNIT.

TRANSPORT WEIGHT	352739 LBS.	160000 KGS.
TOTAL WEIGHT (OIL FILLED)	604066 LBS.	274000 KGS.
OIL QUANTITY	23644 USG.	89500 LITRES

REVISION CONTROLLED COPY

PURCHASER NAME	MIRANT CORPORATION COUNTY CLARK, NEVADA.
PURCHASE ORDER NUMBER	20170567
EQUIPMENT NUMBER	1YXA - XM101 (C00035_01 UNIT 1) 1YXA - XM201 (C00035_02 UNIT 2)
DESTINATION/GENERATING PLANT NAME	APEX PROJECT, CLARK COUNTY, NEVADA.

PROJECTION FIRST ANGLE

VA TECH
Peebles Transformers Limited
Edinburgh EH6 7AH, SCOTLAND

This drawing and any copies of this drawing are at all times the property of VA TECH Peebles Transformers Limited. The proprietors hereby notify that it is strictly prohibited for this drawing to be copied or used for any purpose nor its contents disclosed to others without their express permission.
Copyright © 2011 VA TECH Peebles Transformers Limited.

DRAWING TITLE
OUTLINE ARRANGEMENT FOR 215 MVA, 525/18 kV 3-PH, 60 HZ, ONAN/ONAF/ONAF COOLED GENERATOR TRANSFORMER

REVISION		NAME	DATE
1	DRAWING REVISED BY	C.TENNANT	02.07.01
	REVISION CHECKED BY	R.BLAKE	02.07.01
	REVISION APPROVED BY	R.BLAKE	02.07.01
MODIFICATION	DRAWING REVISED.		
2	DRAWING REVISED BY	C.TENNANT	20.09.01
	REVISION CHECKED BY	R.BLAKE	27.10.01
	REVISION APPROVED BY	R.BLAKE	27.10.01
MODIFICATION	DRAWING UPDATED. EQUIPMENT NUMBERS ADDED. SHEET 2 ADDED. WEIGHTS, CoG & OIL QUANTITES REVISED. ITEM 30 WAS 16-OFF NOW 14-OFF. ITEM 31 WAS 8-OFF NOW 7-OFF.		
3	DRAWING REVISED BY	C.TENNANT	26.11.01
	REVISION CHECKED BY	R.BLAKE	26.11.01
	REVISION APPROVED BY	R.BLAKE	26.11.01
MODIFICATION	ITEM 3 WAS REF. 3-40410545, NOW REF. 025D001 D. NOTE (1) ADDED. C.G.(A) INDICATED ON CoG NOTES.		
4	DRAWING REVISED BY	C.TENNANT	31.01.02
	REVISION CHECKED BY	R.BLAKE	31.01.02
	REVISION APPROVED BY	R.BLAKE	31.01.02
MODIFICATION	PARTS 58 & 59 ADDED. FAN POSTIONS LABELLED.		
5	DRAWING REVISED BY	NAME	DATE
	REVISION CHECKED BY		
	REVISION APPROVED BY		
MODIFICATION			
6	DRAWING REVISED BY	NAME	DATE
	REVISION CHECKED BY		
	REVISION APPROVED BY		
MODIFICATION			
7	DRAWING REVISED BY	NAME	DATE
	REVISION CHECKED BY		
	REVISION APPROVED BY		
MODIFICATION			
8	DRAWING REVISED BY	NAME	DATE
	REVISION CHECKED BY		
	REVISION APPROVED BY		
MODIFICATION			

REFERENCE DRAWINGS
TRANSPORT ARRANGEMENT - 821400_C35_01

ORIGINAL SCALE : 2:75	SHEET SIZE	A0
SHEET 1 OF 2		
DRAWING FILENAME: 961400_C35_01		

	NAME	DATE
DRAWN BY	C.TENNANT	15.05.01
DRAWING CHECKED BY	J.MOFFAT	23.05.01
DRAWING APPROVED BY	J.MOFFAT	23.05.01
DESIGN APPROVED BY	I.MACKAY	23.05.01

DRAWING NUMBER 961400_C35_01
REVISION 4

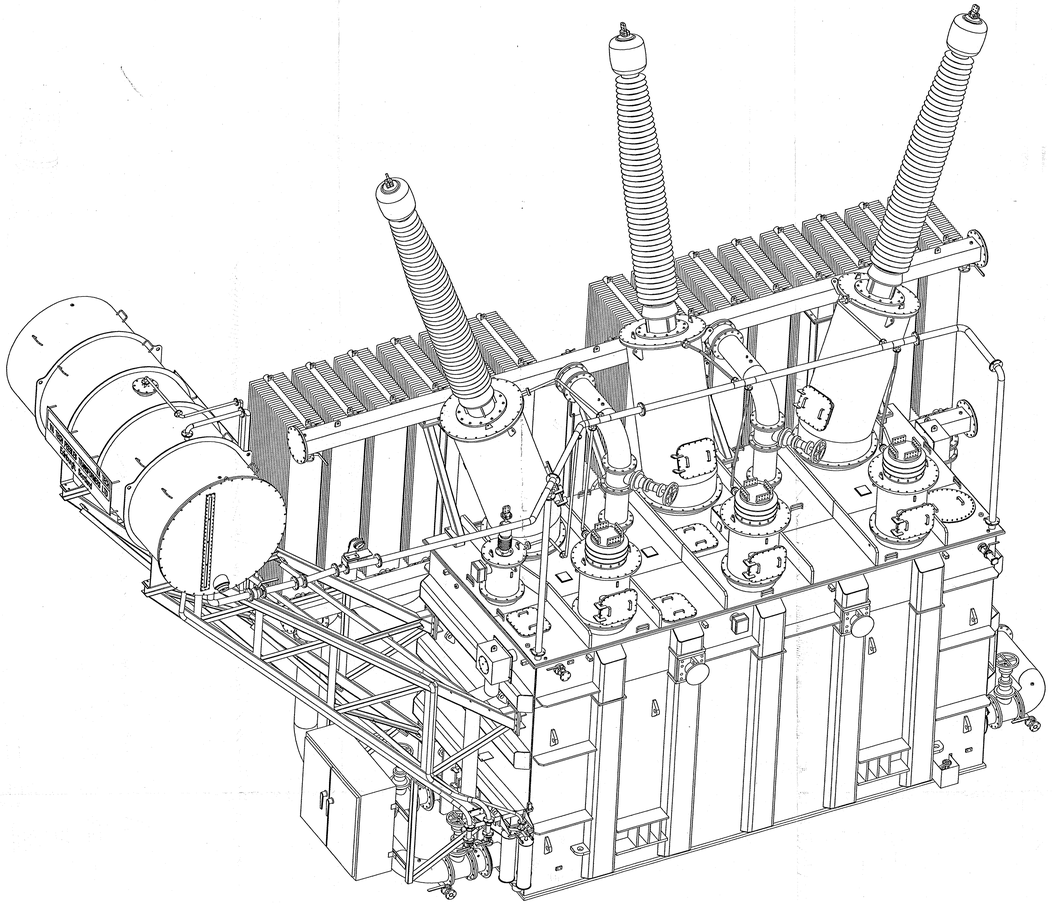

VIEW OF LV SIDE

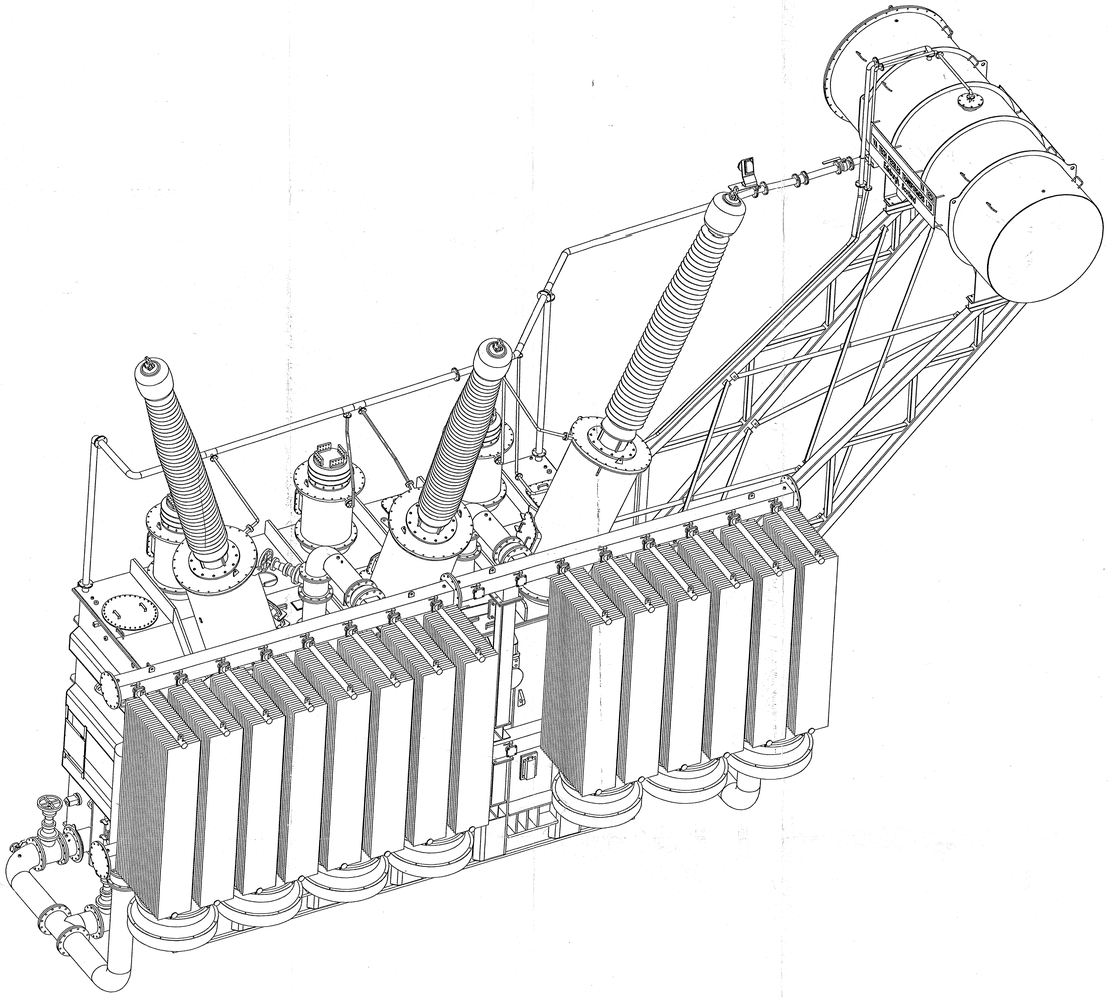

VIEW OF HV SIDE

REVISION CONTROLLED COPY

PROJECTION FIRST ANGLE	VA TECH Peebles Transformers Limited Edinburgh EH6 7AH, SCOTLAND	This drawing and any copies of this drawing are at all times the property of VA TECH Peebles Transformers Limited. The proprietors hereby notify that it is strictly prohibited for this drawing to be copied or used for any purpose nor its contents disclosed to others without their express permission. Copyright © 2001 VA TECH Peebles Transformers Limited.	DRAWING TITLE: OUTLINE ARRANGEMENT FOR 215 MVA 525/18 kV 3-PH, 60 HZ, ONAN/ONAF/ONAF COOLED GENERATOR TRANSFORMER

	NAME	DATE
DRAWN BY	C.TENNANT	11.10.01
DRAWING CHECKED BY	R.BLAKE	27.10.01
DRAWING APPROVED BY	R.BLAKE	27.10.01
DESIGN APPROVED BY	I.MACKAY	27.10.01

REFERENCE DRAWINGS: TRANSPORT ARRANGEMENT - 821400_C35_01

ORIGINAL SCALE : 1:30
SHEET 1 OF 2
DRAWING FILENAME: 961400_C35_01

SHEET SIZE: A0

DRAWING NUMBER: 961400_C35_01

REVISION: 0

		NAME	DATE
REVISION 1	DRAWING REVISED BY		
	REVISION CHECKED BY		
	REVISION APPROVED BY		
REVISION 2	DRAWING REVISED BY		
	REVISION CHECKED BY		
	REVISION APPROVED BY		
REVISION 3	DRAWING REVISED BY		
	REVISION CHECKED BY		
	REVISION APPROVED BY		
REVISION 4	DRAWING REVISED BY		
	REVISION CHECKED BY		
	REVISION APPROVED BY		
REVISION 5	DRAWING REVISED BY		
	REVISION CHECKED BY		
	REVISION APPROVED BY		
REVISION 6	DRAWING REVISED BY		
	REVISION CHECKED BY		
	REVISION APPROVED BY		
REVISION 7	DRAWING REVISED BY		
	REVISION CHECKED BY		
	REVISION APPROVED BY		
REVISION 8	DRAWING REVISED BY		
	REVISION CHECKED BY		
	REVISION APPROVED BY		

MODIFICATION 1 | MODIFICATION 2 | MODIFICATION 3 | MODIFICATION 4 | MODIFICATION 5 | MODIFICATION 6 | MODIFICATION 7 | MODIFICATION 8

13308-DC-136A

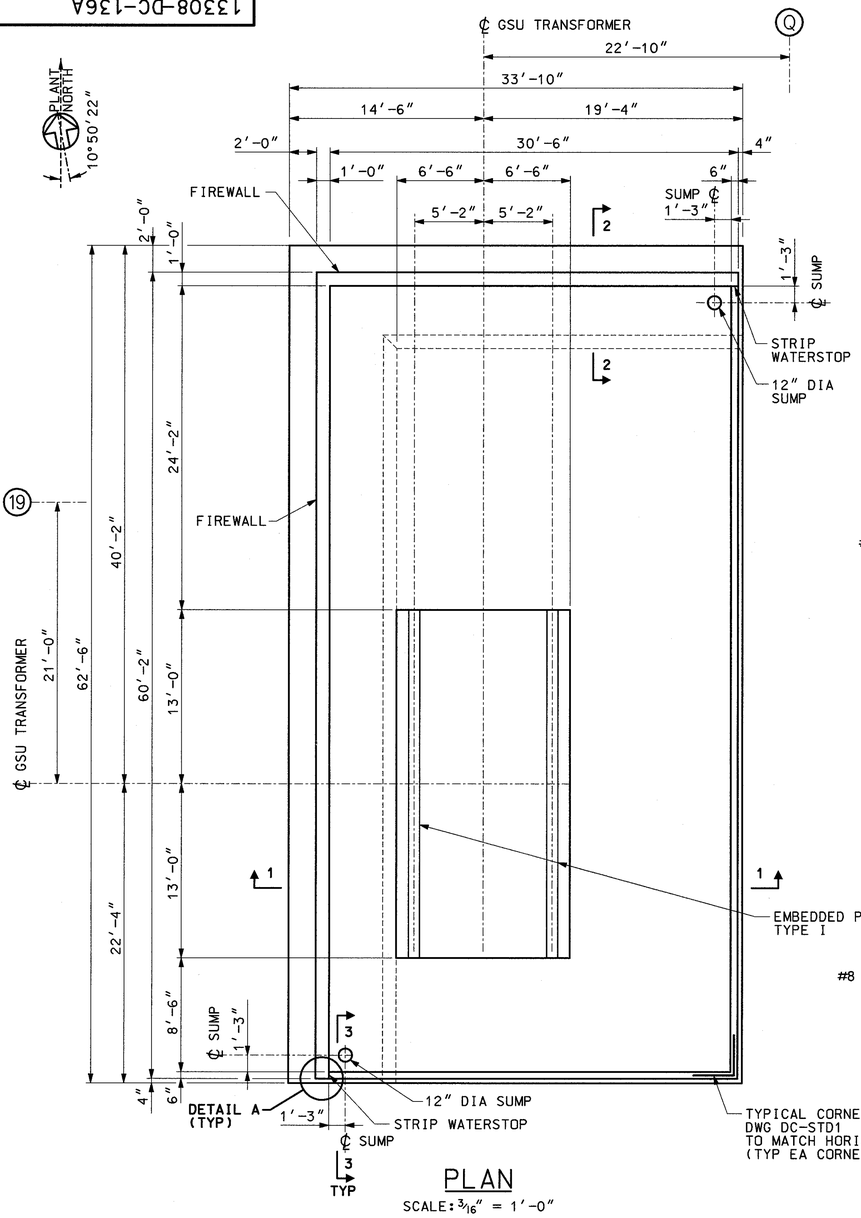

PLAN

SCALE: 3/16" = 1'-0"

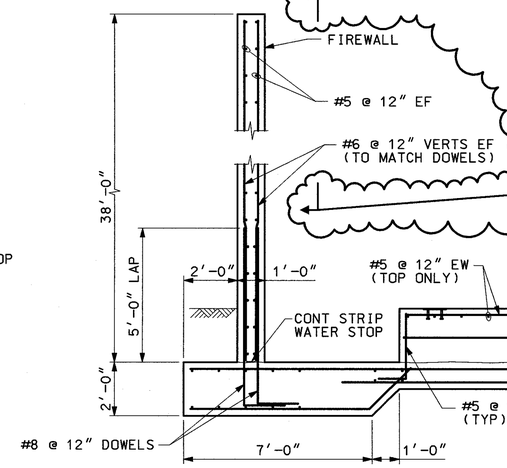

SECTION 1-1

SCALE: 3/8" = 1'-0"

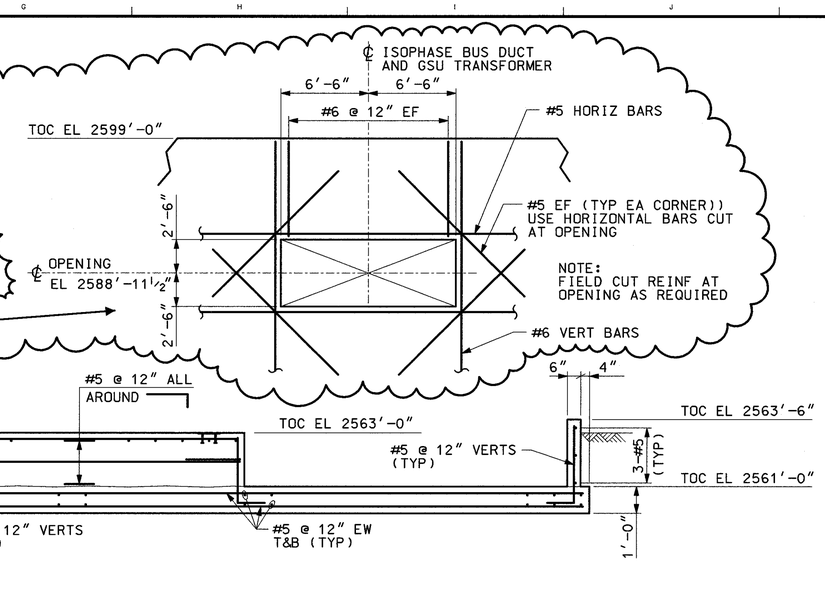

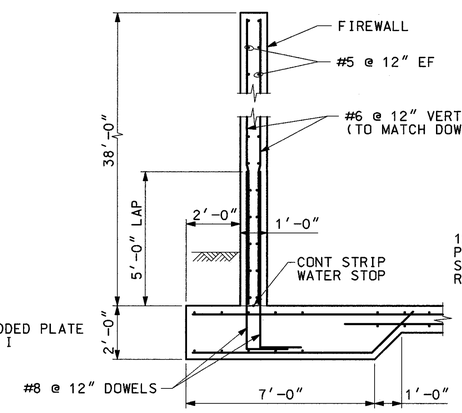

SECTION 2-2

SCALE: 3/8" = 1'-0"

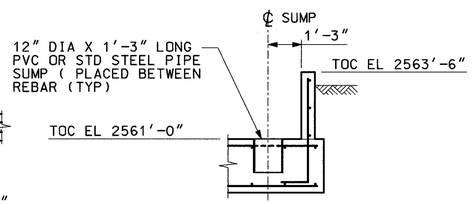

SECTION 3-3

SCALE: 3/8" = 1'-0"

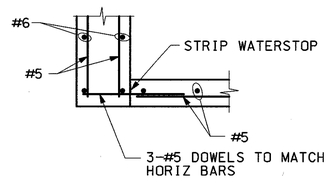

DETAIL A-A

SCALE: 3/4" = 1'-0"

NOTES:

1. FOR GENERAL NOTES AND STANDARD DETAILS SEE DRAWING DC-STD1 AND DC-STD2.
2. FOR ELECTRICAL UNDERGROUND CONDUIT STUB-UPS SEE DWG 13308-DE-613.

REFERENCE DWG:

VA TECH PEEBLES TRANSFORMERS LTD
OUTLINE ARRANGMENT
DWG 961400_C35_01

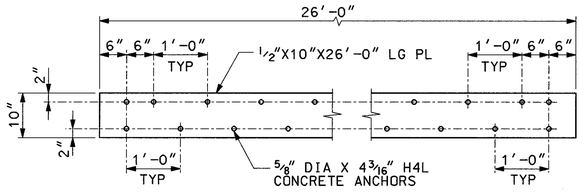

EMBED PLATE TYPE I

(2 REQUIRED)
SCALE: 3/4" = 1'-0"

REVISION	DESCRIPTION	CHECKED	REVISION	DESCRIPTION	CHECKED	REVISION	DESCRIPTION	CHECKED	REVISION	DESCRIPTION	CHECKED
		CORRECT			CORRECT	1	REMOVED HOLD. ADDED BUS DUCT OPENING PER ECN NO. 000009	CORRECT	0	ISSUED FOR CONSTRUCTION	JS CORRECT WIG RSM
		APPR / DATE			APPR / DATE			APPR / DATE 10/05/01			APPR / DATE RCC 8/1/01

SCANNED OCT 04 2001

REGISTERED PROFESSIONAL ENGINEER PETER W. SMITH CIVIL No. 11313 STATE OF NEVADA 10-4-01

APEX GENERATING STATION
UNIT NO. 1
COMBUSTION TURBINE - 1A
GSU TRANSFORMER FOUNDATION PLAN
SECTIONS & DETAILS SHEET 1

MIRANT CORPORATION
MIRANT CLARK COUNTY, NEVADA

STONE & WEBSTER A SHAW GROUP COMPANY

DRAWING NO. 13308-DC-136A-1

DESIGNED BY J.SAUTINS	DRAWN BY M.GUECIA	CAD MODEL	LEVELS	WORK PKG	PCT
DSGN CHK'D BY S.GEIST	CHK'D BY J.SAUTINS	APDC136A			

RESP ENGR P.J.SMITH
SUPV J.SAUTINS

13308-DC-236A

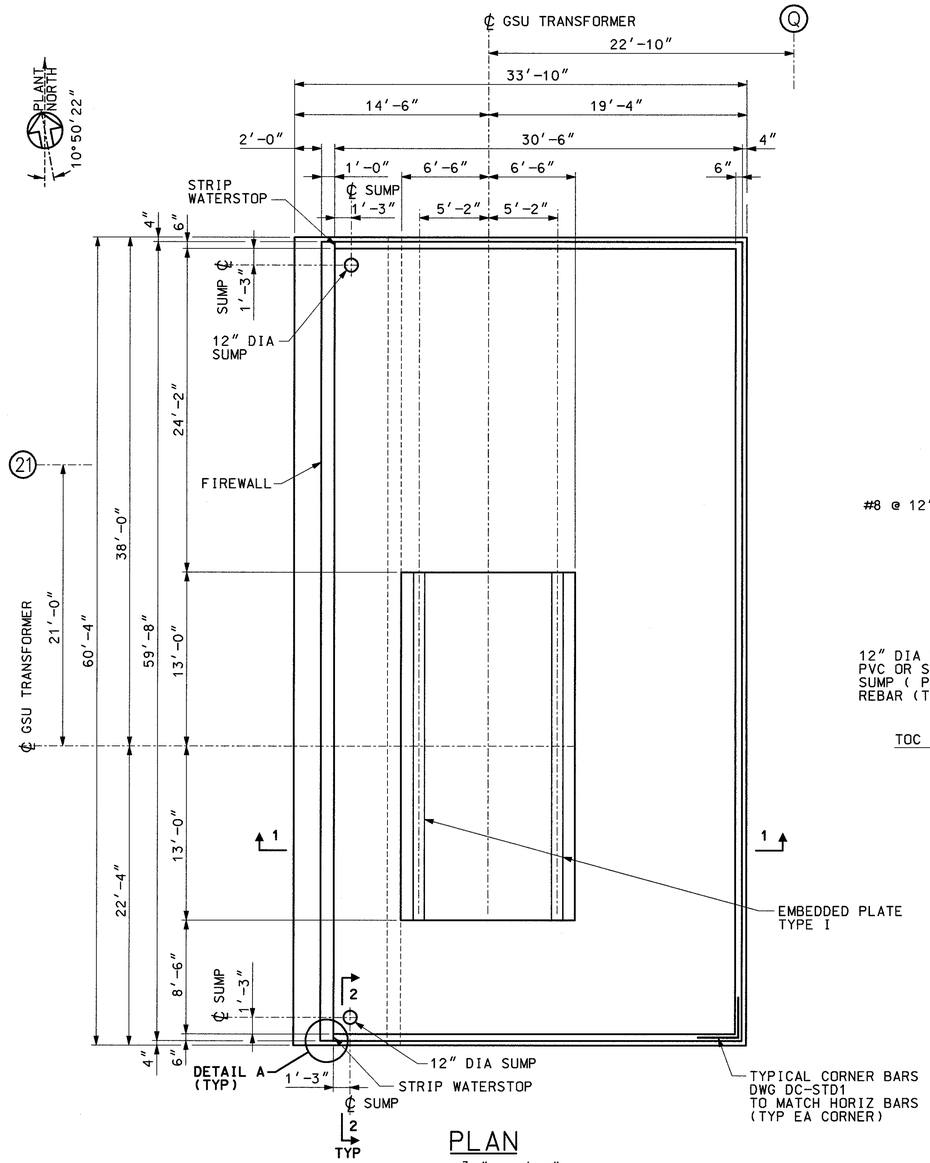

PLAN

SCALE: 3/16" = 1'-0"

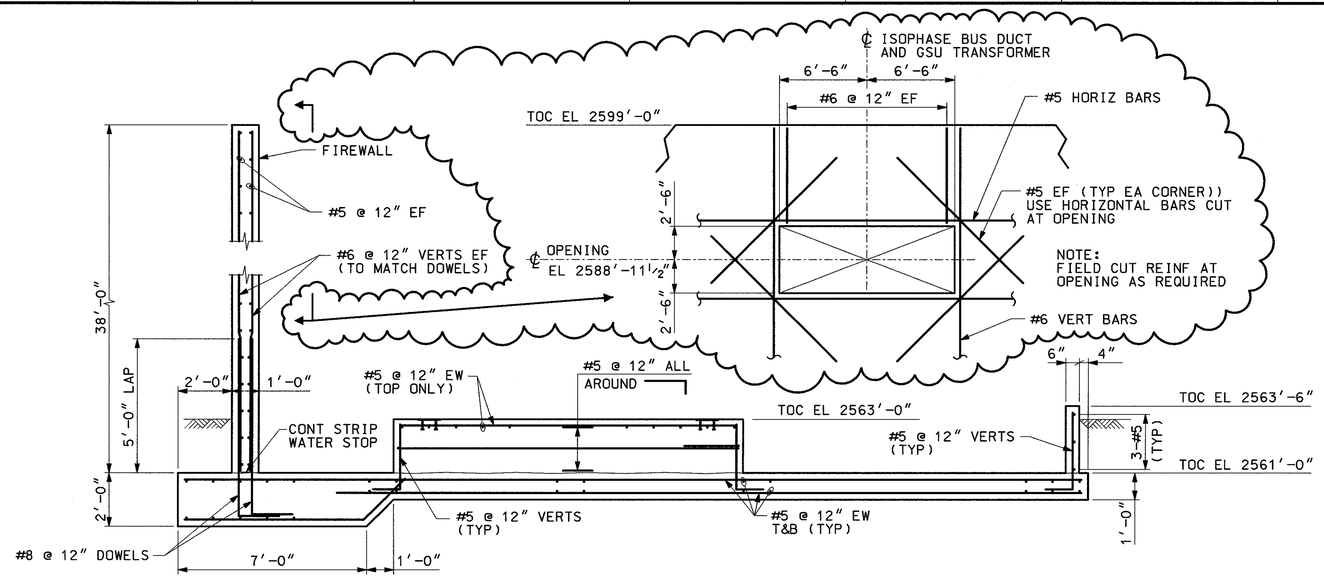

SECTION 1-1

SCALE: 3/8" = 1'-0"

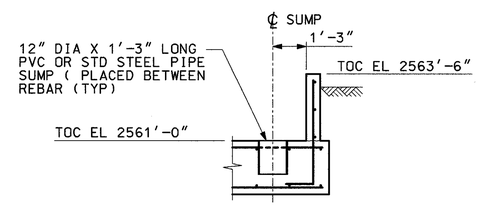

SECTION 2-2

SCALE: 3/8" = 1'-0"

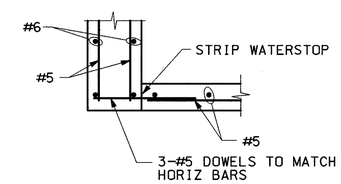

DETAIL A-A

SCALE: 3/4" = 1'-0"

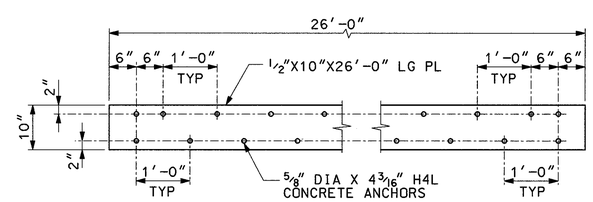

EMBED PLATE TYPE I

(2 REQUIRED)
SCALE: 3/4" = 1'-0"

NOTES:

1. FOR GENERAL NOTES AND STANDARD DETAILS SEE DRAWING DC-STD1 AND DC-STD2.
2. FOR ELECTRICAL UNDERGROUND CONDUIT STUB-UPS SEE DWG 13308-DE-622.

REFERENCE DWG:

VA TECH PEEBLES TRANSFORMERS LTD
OUTLINE ARRANGMENT
DWG 961400_C35_01

REVISION	DESCRIPTION	CHECKED	REVISION	DESCRIPTION	CHECKED	REVISION	DESCRIPTION	CHECKED	REVISION	DESCRIPTION	CHECKED
		CORRECT			CORRECT	1	REMOVED HOLD. ADDED BUS DUCT OPENING PER ECN NO. 000009	CORRECT	0	ISSUED FOR CONSTRUCTION	JS CORRECT
		APPR / DATE			APPR / DATE			APPR / DATE			WIG / RSM / APPR / DATE
								10/5/01			RCC 8/01/01

SCANNED OCT 04 2001

REGISTERED PROFESSIONAL ENGINEER PETER J. SMITH CIVIL No. 4125 STATE OF NEVADA 10-4-01

APEX GENERATING STATION UNIT NO. 1

COMBUSTION TURBINE - 1B GSU TRANSFORMER FOUNDATION PLAN SECTIONS & DETAILS SHEET 1

MIRANT CORPORATION
MIRANT CLARK COUNTY, NEVADA

STONE & WEBSTER A SHAW GROUP COMPANY

DRAWING NO. 13308-DC-236A-1

DESIGNED BY J.SAUTINS	DRAWN BY M.GUECIA	CAD MODEL	LEVELS	WORK PKG
DSGN CHK'D BY S.GEIST	CHK'D BY J.SAUTINS	APDC236A		

RESP. ENGR. P.J.SMITH
SUPV. J.SAUTINS
PCT

13308-DC-336A

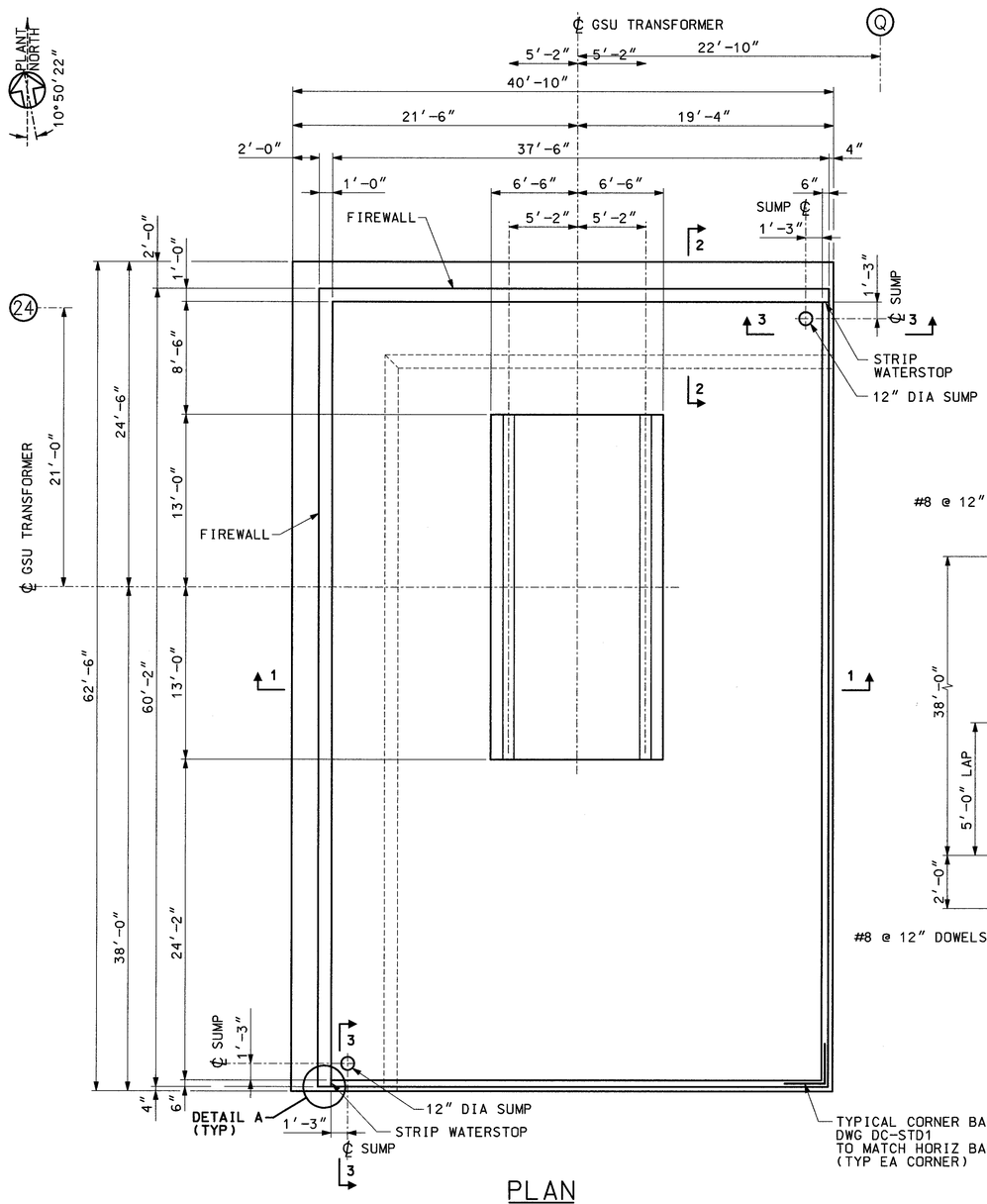

PLAN

SCALE: 3/16" = 1'-0"

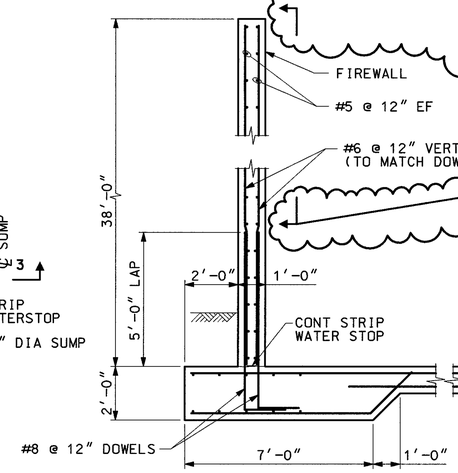

SECTION 1-1

SCALE: 3/8" = 1'-0"

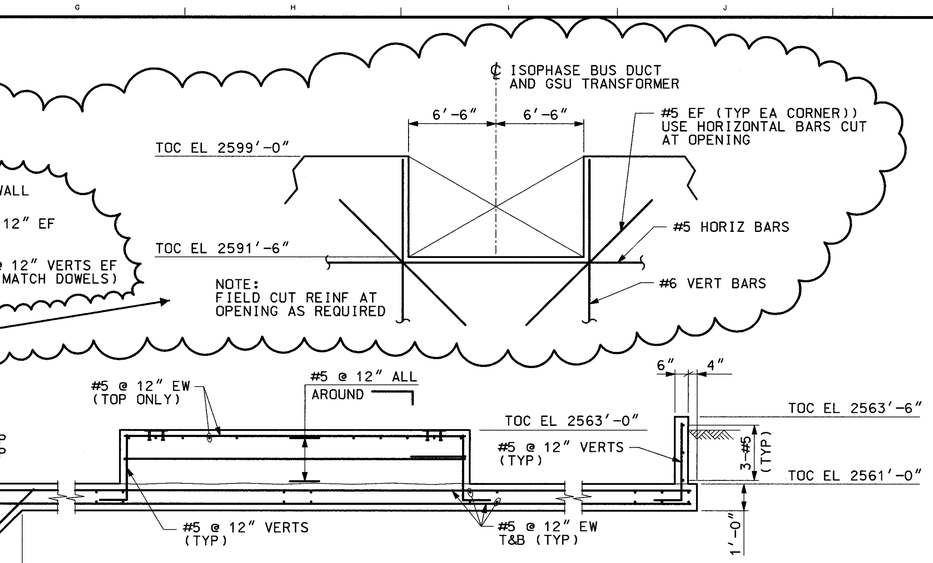

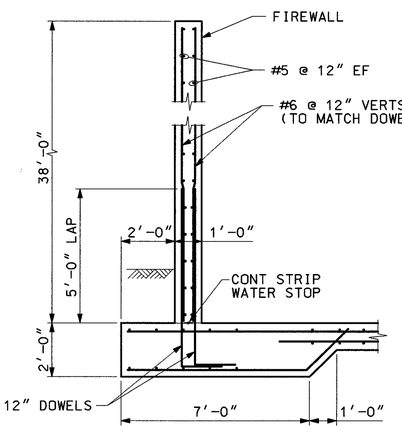

SECTION 2-2

SCALE: 3/8" = 1'-0"

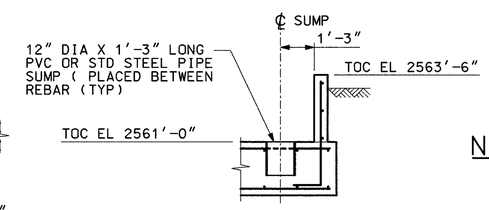

SECTION 3-3

SCALE: 3/8" = 1'-0"

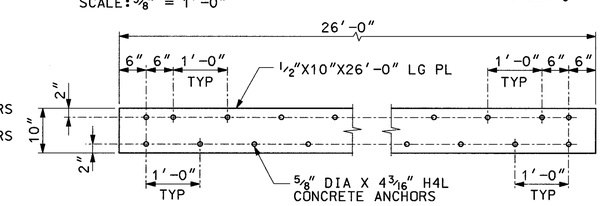

EMBED PLATE TYPE I

(2 REQUIRED)
SCALE: 3/4" = 1'-0"

NOTES:

1. FOR GENERAL NOTES AND STANDARD DETAILS SEE DRAWING DC-STD1 AND DC-STD2.
2. FOR ELECTRICAL UNDERGROUND CONDUIT STUB-UPS SEE DWG 13308-DE-629 & 634.

REFERENCE DWG:

VA TECH PEEBLES TRANSFORMERS LTD
OUTLINE ARRANGMENT
DWG 961401_C35_03

REVISION		DESCRIPTION	CHECKED		CORRECT	APPR	DATE

REVISION		DESCRIPTION	CHECKED		CORRECT	APPR	DATE

REVISION	1	DESCRIPTION	CHECKED		CORRECT	APPR	DATE
		REMOVED HOLD. ADDED BUS DUCT OPENING PER ECN NO. 000009					10/03/01

REVISION	0	DESCRIPTION	CHECKED		CORRECT	APPR	DATE
		ISSUED FOR CONSTRUCTION	JS		WIG	RCC	8/1/01

SCANNED OCT 04 2001

REGISTERED PROFESSIONAL ENGINEER STATE OF NEVADA PETER J. SMITH CIVIL No. 14129 10-4-01

APEX GENERATING STATION
UNIT NO. 1
STEAM TURBINE - STG1
GSU TRANSFORMER FOUNDATION PLAN
SECTIONS & DETAILS SHEET 1

MIRANT CORPORATION
MIRANT CLARK COUNTY, NEVADA

STONE & WEBSTER A SHAW GROUP COMPANY

DRAWING NO. 13308-DC-336A-1

DESIGNED BY J.SAUTINS	DRAWN BY M.GUECIA	CAD MODEL	LEVELS	WORK PKG	PCT
DSGN CHK'D BY S.GEIST	CHK'D BY J.SAUTINS	APDC336A			

RESP. ENGR P.J.SMITH
SUPV. J.SAUTINS

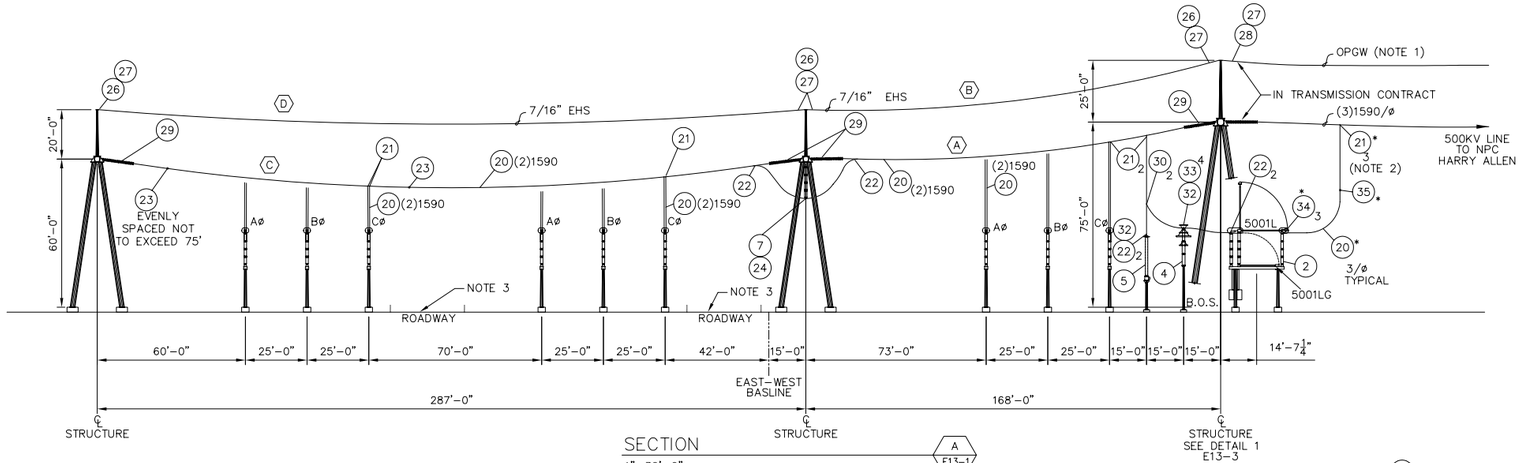

SECTION A E13-1
1"=30'-0"

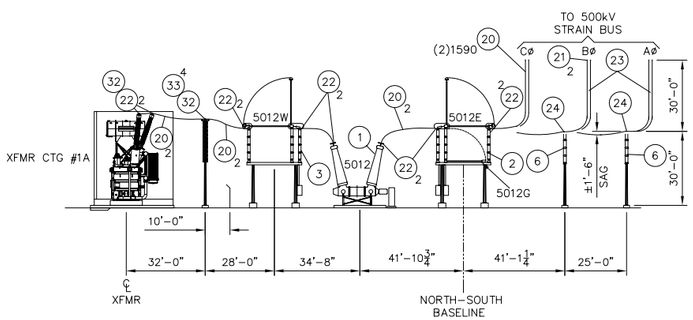

SECTION B E13-1
1"=30'-0"

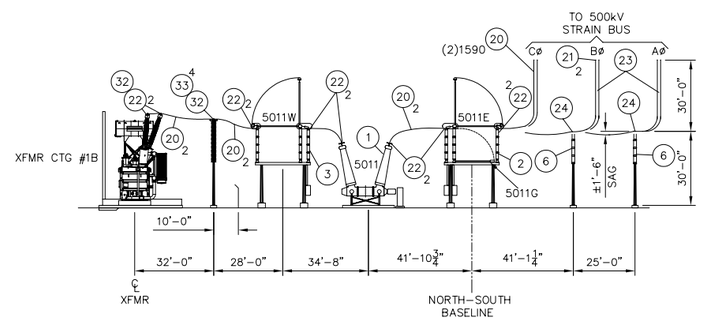

SECTION C E13-1
1"=30'-0"

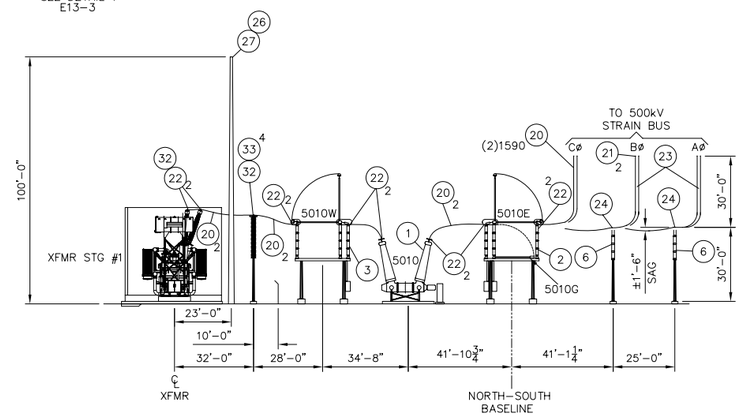

SECTION D E13-1
1"=30'-0"

HORIZONTAL STRAIN BUS & STATIC WIRE SAG CHART

SPAN	CONDUCTOR			INITIAL SAG & TENSION (LBS.) PER CONDUCTOR									
	SPAN LENGTH	MAX DESIGN TENSION	TYPE	20°F	30°F	40°F	50°F	60°F	70°F	80°F	90°F	100°F	110°F
A	168'-0"	4,000LBS PER CONDUCTOR 8,000LBS PER PHASE	(2) 1590KCM ASCR LAPWING	2'-8" 2357	2'-10" 2212	3'-0" 2088	3'-2" 1981	3'-4" 1887	3'-6" 1804	3'-8" 1731	3'-10" 1665	3'-11" 1606	4'-1" 1553
B	168'-0"	1,400LBS –	7/16" EHS 7 STRAND STEEL	1'-1" 1342	1'-2" 1233	1'-3" 1134	1'-4" 1044	1'-6" 963	1'-7" 892	1'-8" 829	1'-10" 774	1'-11" 726	2'-1" 683
C	287'-0"	4,000LBS PER CONDUCTOR 8,000LBS PER PHASE	(2) 1590KCM ASCR LAPWING	– –	– –	– –	– –	8'-0" 2318	8'-2" 2262	8'-4" 2210	8'-7" 2161	8'-9" 2115	8'-11" 2072
D	287'-0"	1,400LBS –	7/16" EHS 7 STRAND STEEL	3'-11" 1047	4'-1" 1003	4'-3" 962	4'-5" 925	4'-7" 891	4'-9" 860	4'-11" 832	5'-1" 805	5'-3" 781	5'-5" 758
E	242'-6"	1,500LBS –	7/16" EHS 7 STRAND STEEL	2'-3" 1311	2'-5" 1229	2'-7" 1155	2'-9" 1088	2'-11" 1028	3'-0" 974	3'-2" 926	3'-4" 882	3'-6" 843	3'-8" 807
F	140'-0"	1,500LBS –	7/16" EHS 7 STRAND STEEL	0'-9" 1333	0'-10" 1212	0'-11" 1100	1'-0" 999	1'-1" 910	1'-3" 831	1'-4" 762	1'-5" 703	1'-6" 652	1'-8" 609

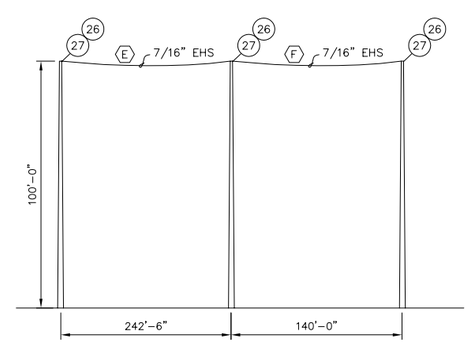

GSU STATIC WIRE ELEVATION
NOT TO SCALE

NOTES:

1. TRANSMISSION LINE CONTRACTOR WILL FURNISH AND INSTALL ALL PHASE, STATIC, OPGW, NEUTRAL CONDUCTOR AND ASSOCIATED HARDWARE FROM HARRY ALLEN TO THE DEADEND STRUCTURE.
2. ITEMS DENOTED WITH AN ASTERISK (*) WILL BE FURNISHED BY THE SUBSTATION CONTRACTOR AND INSTALLED BY THE TRANSMISSION LINE CONTRACTOR.
3. VEHICULAR AND EQUIPMENT ACCESS IS NOT PREMITTED AFTER STATION ENERGIZATION WITHOUT VERIFYING ADEQUATE ELECTRICAL CLEARANCE.

0 15 30 60 90 FEET
1"= 30'

REVISION	DESCRIPTION	CHECKED / CORRECT / APPR / DATE
3	RENAMED LINE MOD PER NPC REVISED GSU, CCVT & SURGE ARRESTER TERMINATIONS 5/24/02	
2	UPDATED DEADEND MATERIAL QUANTITIES 4/29/02	
1	GSU LIGHTNING PROTECTION ADDED DEADEND STATIC MAST INCREASED TO 25'-0" STRAIN BUS SAG DATA ENTERED ADDED GSU STATIC WIRE ELEVATION 2/15/02	
4	CONFORMED TO CONSTRUCTION RECORDS 7/23/02	

APEX GENERATING STATION SWITCHYARD
500KV SECTIONS

MIRANT CORPORATION
CLARK COUNTY, NEVADA

POWER ENGINEERS INC.
2401 GRAND AVE, SUITE #400
BILLINGS, MT. 59102

DRAWING NO. E13-2

DESIGNED BY BAIRD	DRAWN BY SRW	CAD MODEL	LEVELS	WORK PKG	RESP. ENGR:
DSGN CHK'D BY OLSON	CHK'D BY OSTERMEIER				SUPV:
					PCT

E13-1

PLAN

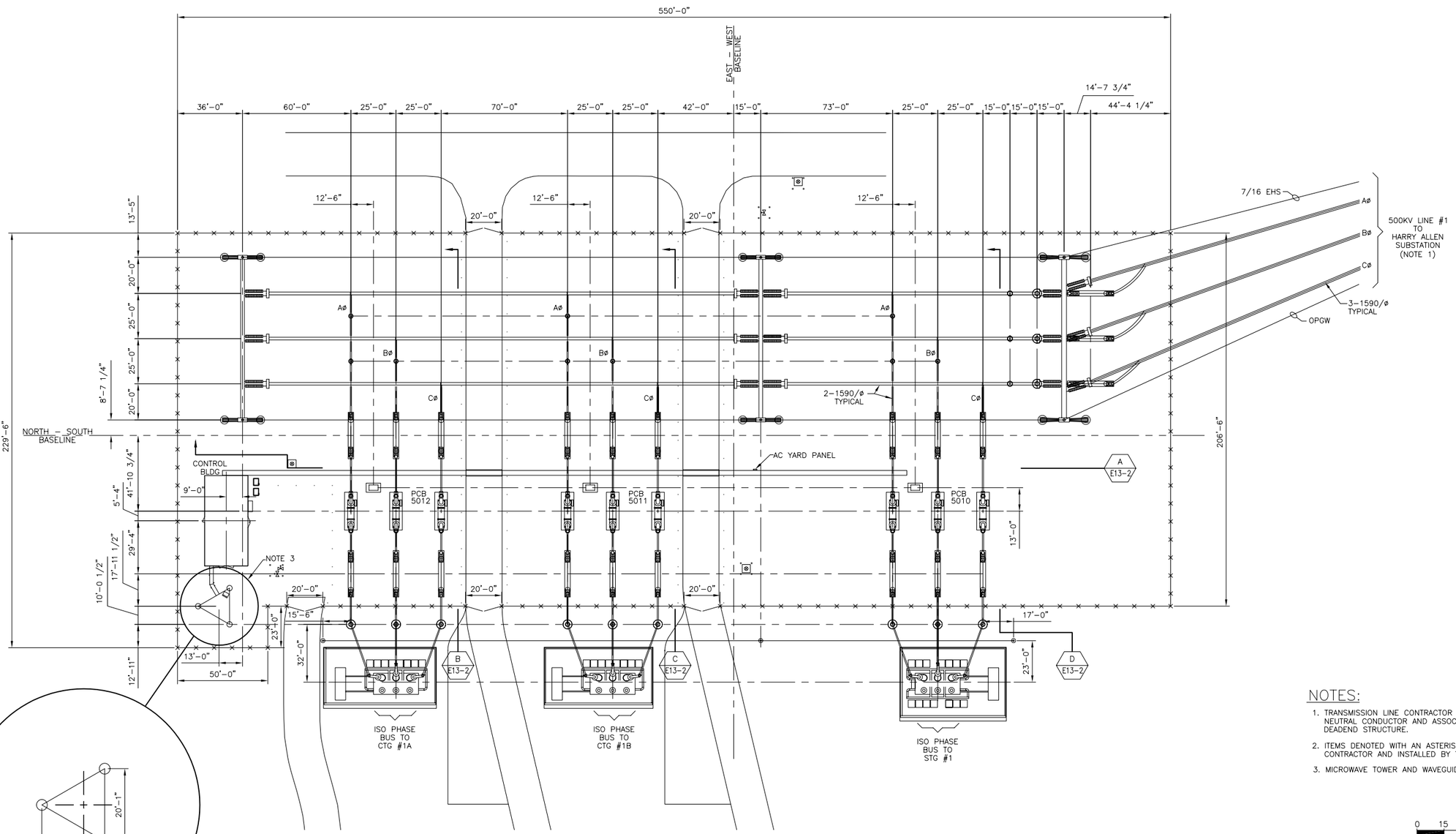

MICROWAVE TOWER DETAIL

NOTES:

1. TRANSMISSION LINE CONTRACTOR WILL FURNISH AND INSTALL ALL PHASE, STATIC, OPGW, NEUTRAL CONDUCTOR AND ASSOCIATED HARDWARE FROM HARRY ALLEN TO THE DEADEND STRUCTURE.
2. ITEMS DENOTED WITH AN ASTERISK (*) WILL BE FURNISHED BY THE SUBSTATION CONTRACTOR AND INSTALLED BY THE TRANSMISSION LINE CONTRACTOR.
3. MICROWAVE TOWER AND WAVEGUIDE WILL BE FURNISHED AND INSTALLED BY NPC.

0 15 30 60 90 FEET

1"= 30'

REVISION	DESCRIPTION	CHECKED	CORRECT	APPR	DATE

REVISION	DESCRIPTION	CHECKED	CORRECT	APPR	DATE
2	CONFORMED TO CONSTRUCTION RECORDS 7/23/02				
1	MOVED CABLE TRENCH 8'-0" NORTH, 5'-4" WEST MOVED CONTROL BUILDING 9'-0" NORTH, 5'-4" WEST ADDED GSU LIGHTNING PROTECTION 2/15/02 ADDED AC YARD PANEL				
0	ISSUED FOR CONSTRUCTION 12/31/01				

APEX GENERATING STATION SWITCHYARD
GENERAL ARRANGEMENT

MIRANT CORPORATION
MIRANT CLARK COUNTY, NEVADA

POWER ENGINEERS INC.
POWER ENGINEERS
2401 GRAND AVE, SUITE #400
BILLINGS, MT. 59102

DRAWING NO. E13-1

DESIGNED BY BAIRD	DRAWN BY SRW	CAD MODEL	LEVELS	WORK PKG	PCT
DSGN CHK'D BY OLSON	CHK'D BY OSTERMEIER				

RESP ENGR:
SUP'V:

13308-DE-410C

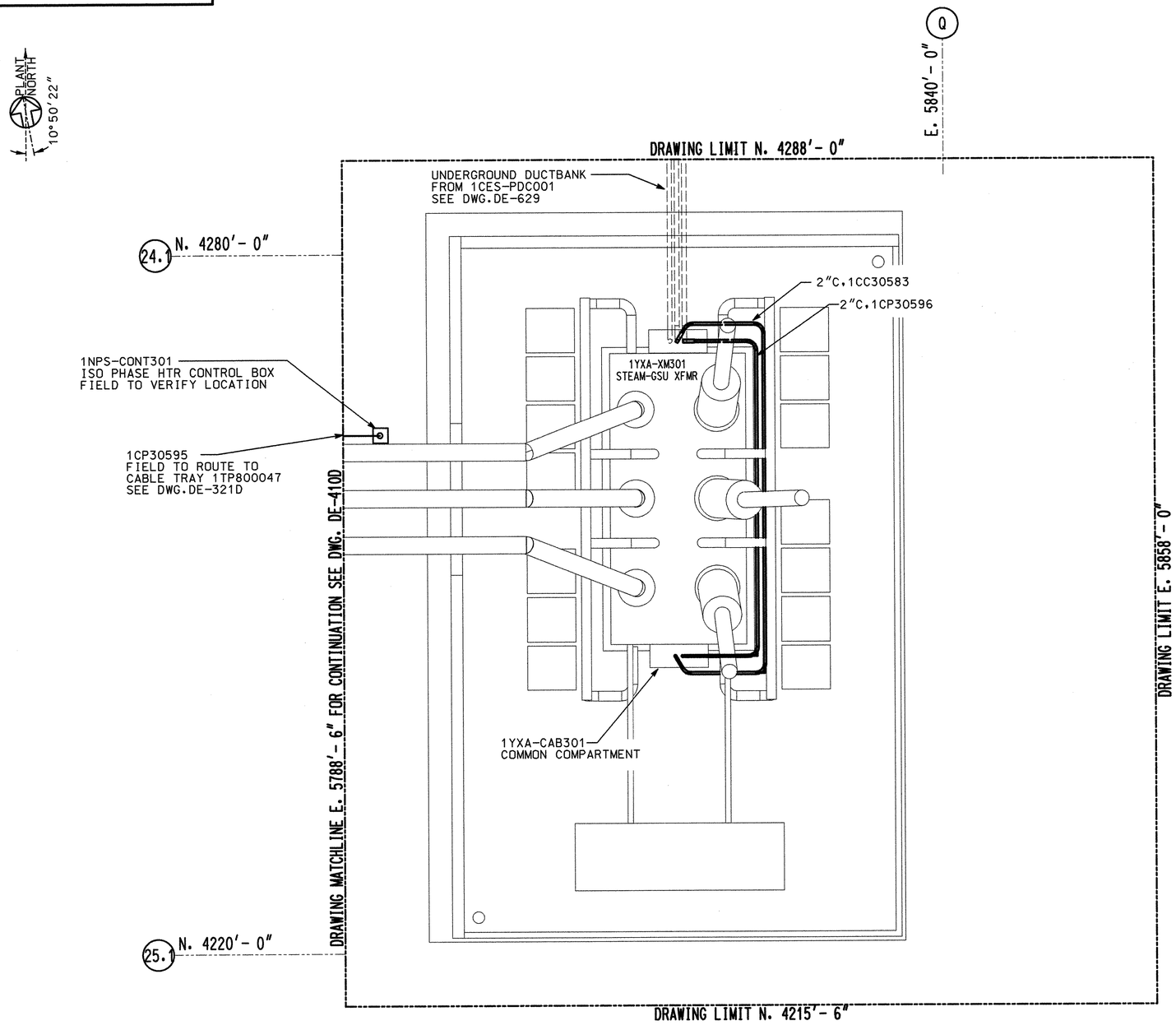

NOTES:

1. FOR NOTES AND LEGEND, SEE DWG.DE-401.
2. FIELD TO CAP UNUSED CONDUIT.

REFERENCE:

DD-TXA-03	WIRING DIAGRAM CONTROL PANEL 1TXA-CAB301
DE-629	1CES-PDC001 UNDERGROUND DUCT BANK
961400.C35.03	VA TECH TRANSPORT ARGMT

0 2' 4' 8' 12' 16'
SCALE: 3/16"=1'-0"

REVISION	DESCRIPTION	CHECKED	REVISION	DESCRIPTION	CHECKED	REVISION	DESCRIPTION	CHECKED	REVISION	DESCRIPTION	CHECKED
		CORRECT			CORRECT			CORRECT	0	ISSUED FOR CONSTRUCTION	LJS 7/2/02
		APPR DATE			APPR DATE			APPR DATE			CORRECT 7/2/02
											APPR DATE

SCANNED
JUL 03 2002

APEX GENERATING STATION
UNIT NO. 1
ELECTRICAL CONDUIT PLAN
AREA 800
STG GSU XFMR 1YXA-XM301

MIRANT CORPORATION
MIRANT CLARK COUNTY, NEVADA

STONE & WEBSTER A SHAW GROUP COMPANY

DRAWING NO. 13308-DE-410C-0

DESIGNED BY J.VACLAVIK	DRAWN BY J.VACLAVIK	CAD MODEL	LEVELS	WORK PKG
DSGN CHK'D BY L.STANEVICH	CHK'D BY M.PRAWL	de410c.dgn		PCT

RESP ENGR M.PRAWL
SUPV L.STANEVICH

13308-DE-407L

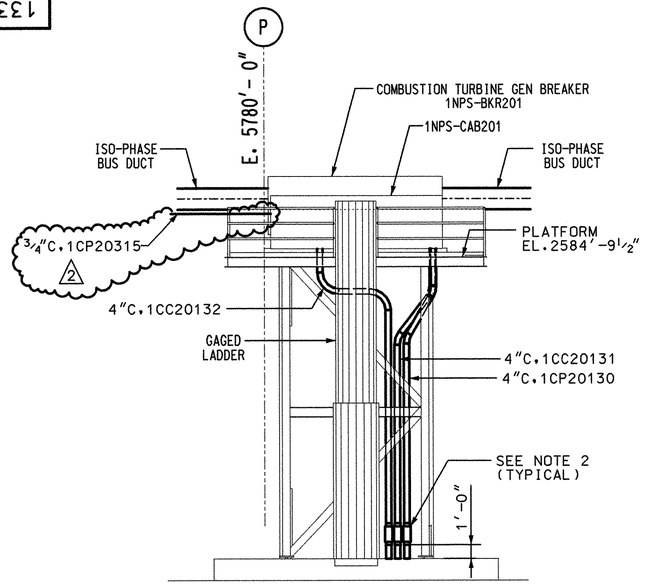

SECTION 1-1
VIEW LOOKING SOUTH
SEE DWG.DE-407K

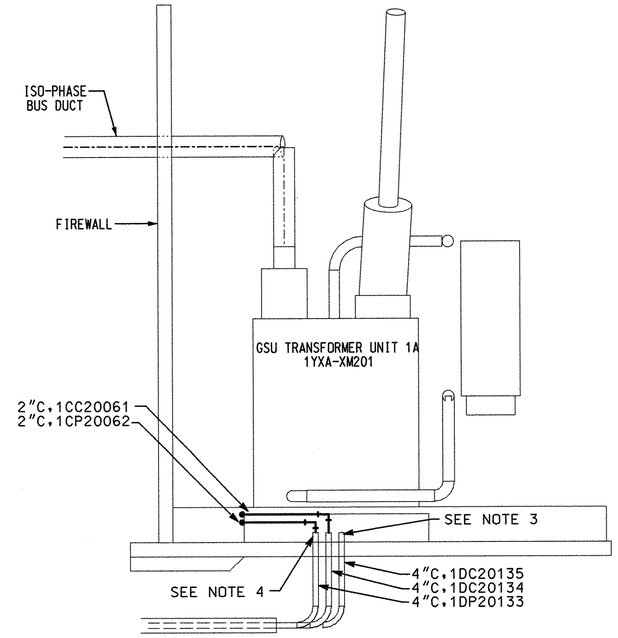

SECTION 2-2
VIEW LOOKING NORTH
SEE DWG. DE-407K

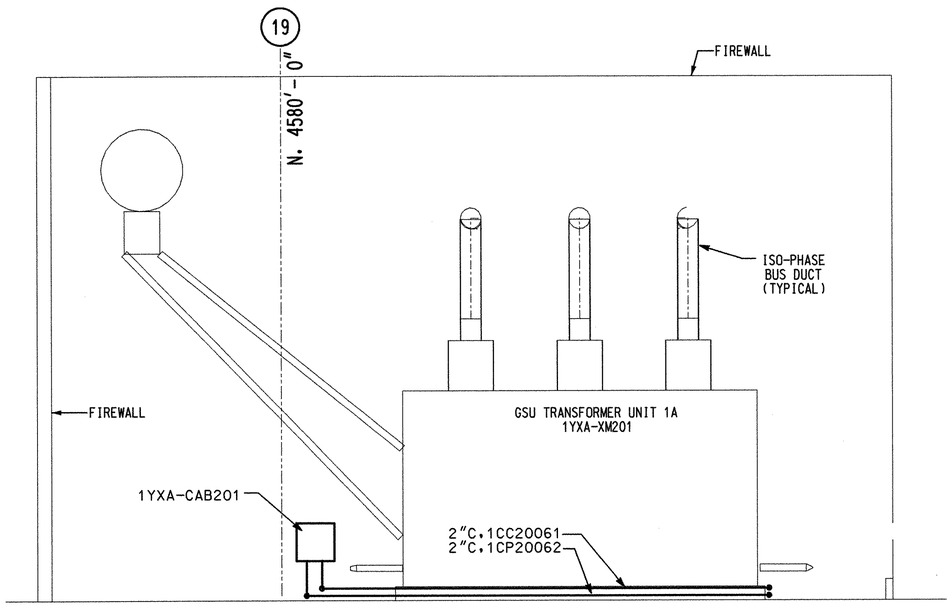

SECTION 3-3
VIEW LOOKING WEST
SEE DWG. DE-407K

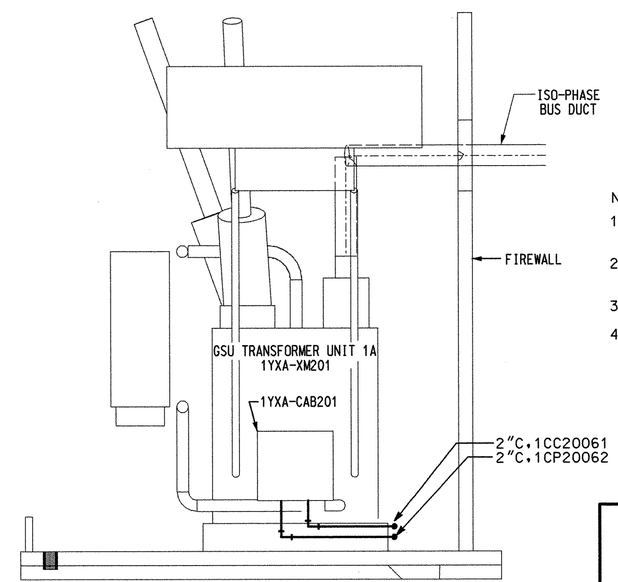

SECTION 4-4
VIEW LOOKING SOUTH
SEE DWG. DE-407K

NOTES:

1. FOR CONDUIT NOTES AND LEGEND, SEE DRAWING DE-401.
2. FIELD SHALL USE "C" CONDULETS, APPLETON CAT NO. BC400M WITH GASKET CAT NO. BKGC400-M.
3. FIELD TO CAP UNUSED CONDUIT.
4. FIELD TO INSTALL REDUCER AND "LL" CONDULETS.

0 2' 4' 8' 12' 16'
SCALE: 3/16"=1'-0"

REVISION	DESCRIPTION	CHECKED	CORRECT	APPR	DATE

REVISION	DESCRIPTION	CHECKED	CORRECT	APPR	DATE
2	RE-ISSUED FOR CONSTRUCTION ADDED CONDUIT 1CP20315	LJS 7/9/02	DAN 7/9/02	MP	7/9/02
1	RE-ISSUED FOR CONSTRUCTION	LJS 7/2/02	LV 7/2/02	RAY	7/2/02
0	ISSUED FOR CONSTRUCTION	LJS 4/12/02	TLR 4/12/02	MP	4/12/02

SCANNED
JUL 11 2002

APEX GENERATING STATION
UNIT NO. 1
ELECTRICAL CONDUIT SECTIONS
AREA 600
COMB TURBINE 1BCTS-CTG201 (NORTH)

MIRANT CORPORATION
MIRANT CLARK COUNTY, NEVADA

STONE & WEBSTER A SHAW GROUP COMPANY

DRAWING NO. 13308-DE-407L-2

DESIGNED BY T.ROBINSON	DRAWN BY T.ROBINSON	CAD MODEL	LEVELS	WORK PKG	PCT
DSGN CHK'D BY W.GEBAUER	CHK'D BY W.GEBAUER	de407l.dgn			

RESP ENGR:
SUPV:

13308-DE-407K

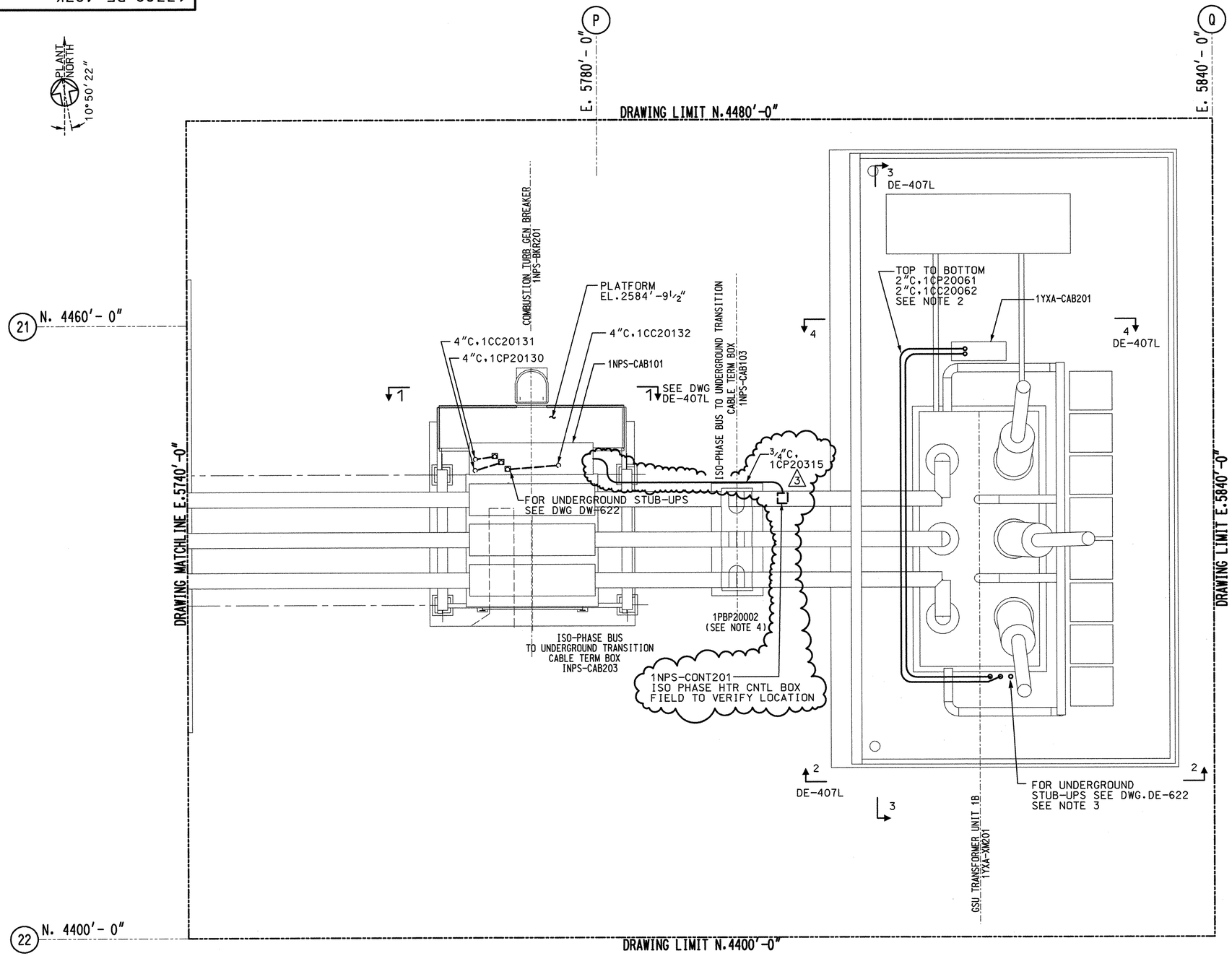

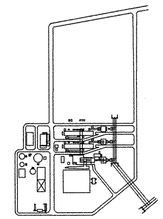

NOTES:

1. FOR CONDUIT NOTES AND LEGEND, SEE DRAWING DE-401.
2. FIELD ROUTED CONDUIT
3. FIELD TO CAP UNUSED STUB-UPS.
4. FOR UNDERGROUND DUCT BANK, SEE DRAWING DE-622.

REFERENCE DRAWINGS:

DE-401	ABOVE GROUND DRAWING LAYOUT
DE-407L	ELECTRICAL CONDUIT SECTIONS
DE-622	UNDERGROUND DUCT BANK PLAN
DE-659H	UNDERGROUND SECTIONS
DD-NPS-02E	COMBINED WIRING DIAGRAM
3 D-6263-11-A1	GENERATOR BREAKER 1NPS-BKR201 CALVERT 29.5KV, 9000A, 125KV BIL INSTALLATION LAYOUT

GSU ENLARGED PLAN

PLAN EL.2563'-6"

0 2' 4' 8' 12' 16'

SCALE: 3/16"=1'-0"

REVISION	DESCRIPTION	CHECKED		CORRECT		APPR	DATE
3	RE-ISSUED FOR CONSTRUCTION ADDED CONDUIT FOR ISO PHASE HTR CNTL BOX	LJS	7/9/02	DAW	7/9/02	MP	7/9/02
2	RE-ISSUED FOR CONSTRUCTION	LJS	7/2/02	JV	7/2/02	RAY	7/2/02
1	RE-ISSUED FOR CONSTRUCTION REVISED CONDUIT STUB-UPS FOR XFMR & GEN BKR	LJS	4/12/02	TLR	4/12/02	MP	4/12/02
0	ISSUED FOR CONSTRUCTION	MP	3/28/02	TLR / WG	3/28/02 / 3/28/02	RCC	3/28/02

SCANNED
JUL 11 2002

APEX GENERATING STATION
UNIT NO. 1
ELECTRICAL CONDUIT PLAN
AREA 600
COMB TURBINE 1BCTS-CTG201 (NORTH)

MIRANT CORPORATION
CLARK COUNTY, NEVADA

STONE & WEBSTER A SHAW GROUP COMPANY

DRAWING NO. 13308-DE-407K-3

DESIGNED BY T.ROBINSON	DRAWN BY T.ROBINSON	CAD MODEL	LEVELS	WORK PKG	PCT
DSGN CHK'D BY W.GEBAUER	CHK'D BY W.GEBAUER	de407k.dgn			

RESP. ENGR:
SUPV:

13308-DE-405L

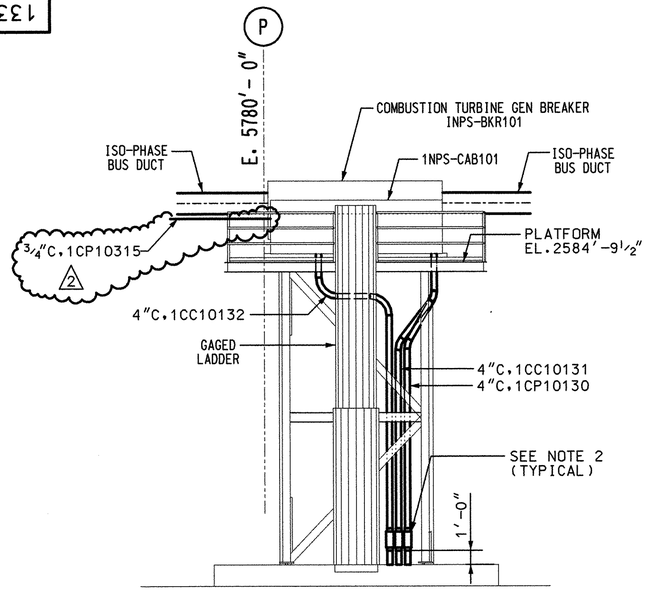

SECTION 1–1

VIEW LOOKING SOUTH
SEE DWG. DE-405K

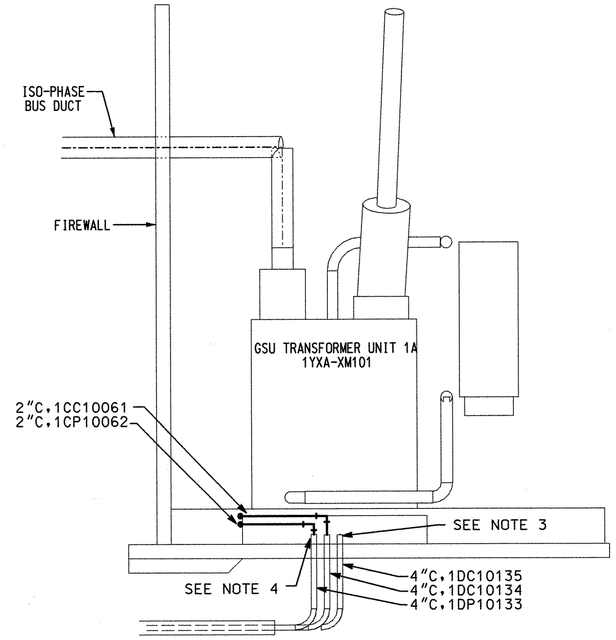

SECTION 2–2

VIEW LOOKING NORTH
SEE DWG. DE-405K

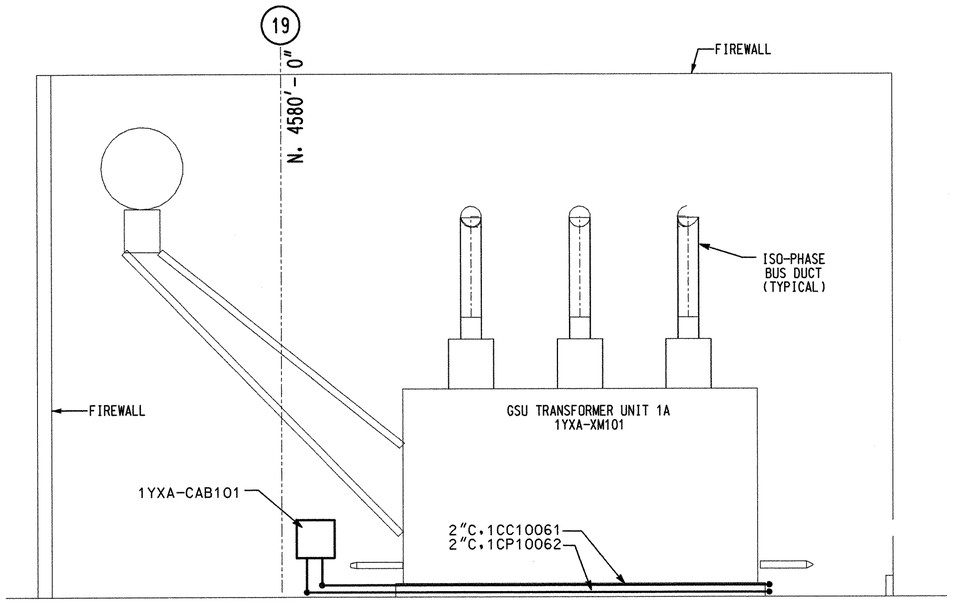

SECTION 3–3

VIEW LOOKING WEST
SEE DWG. DE-405K

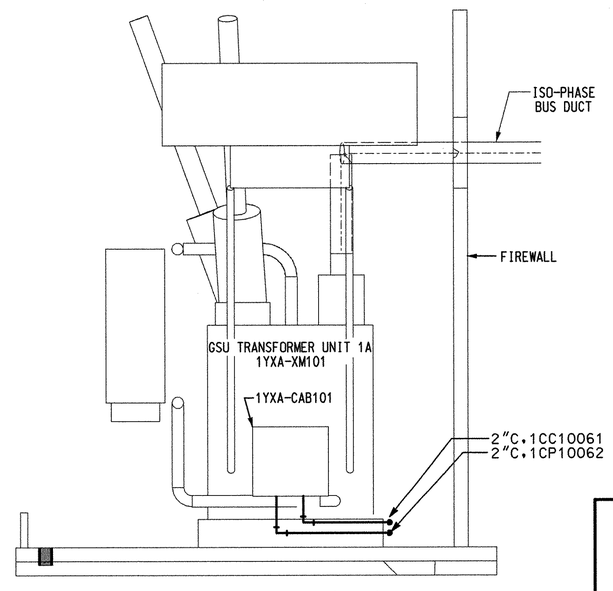

SECTION 4–4

VIEW LOOKING SOUTH
SEE DWG. DE-405K

0 2′ 4′ 8′ 12′ 16′
SCALE: 3/16″=1′-0″

NOTES:

1. FOR CONDUIT NOTES AND LEGEND, SEE DRAWING DE-401.
2. FIELD SHALL USE "C" CONDULETS, APPLETON CAT NO. BC400M WITH GASKET CAT NO. BKGC400-M.
3. FIELD TO CAP UNUSED CONDUITS.
4. FIELD TO INSTALL REDUCER AND "LL" CONDULETS.

REVISION	DESCRIPTION	CHECKED	CORRECT	APPR	DATE

REVISION	DESCRIPTION	CHECKED	CORRECT	APPR	DATE
2	RE-ISSUED FOR CONSTRUCTION ADDED CONDUIT 1CP10315	LJS 7/9/02	RAW 7/9/02	MP	7/9/02
1	RE-ISSUED FOR CONSTRUCTION	LJS 7/2/02	LV 7/2/02	RAY	7/2/02
0	ISSUED FOR CONSTRUCTION	LJS 4/12/02	TLR 4/12/02	MP	4/12/02

SCANNED
JUL 11 2002

APEX GENERATING STATION
UNIT NO. 1
ELECTRICAL CONDUIT SECTIONS
AREA 400
COMB TURBINE 1ACTS-CTG101 (NORTH)

MIRANT CORPORATION
MIRANT CLARK COUNTY, NEVADA

STONE & WEBSTER A SHAW GROUP COMPANY

DRAWING NO. 13308-DE-405L-2

DESIGNED BY T.ROBINSON	DRAWN BY T.ROBINSON	CAD MODEL	LEVELS	WORK PKG	PCT
DSGN CHK'D BY W.GEBAUER	CHK'D BY W.GEBAUER	de405l.dgn			

RESP. ENGR:
SUPV.:

13308-DE-405K

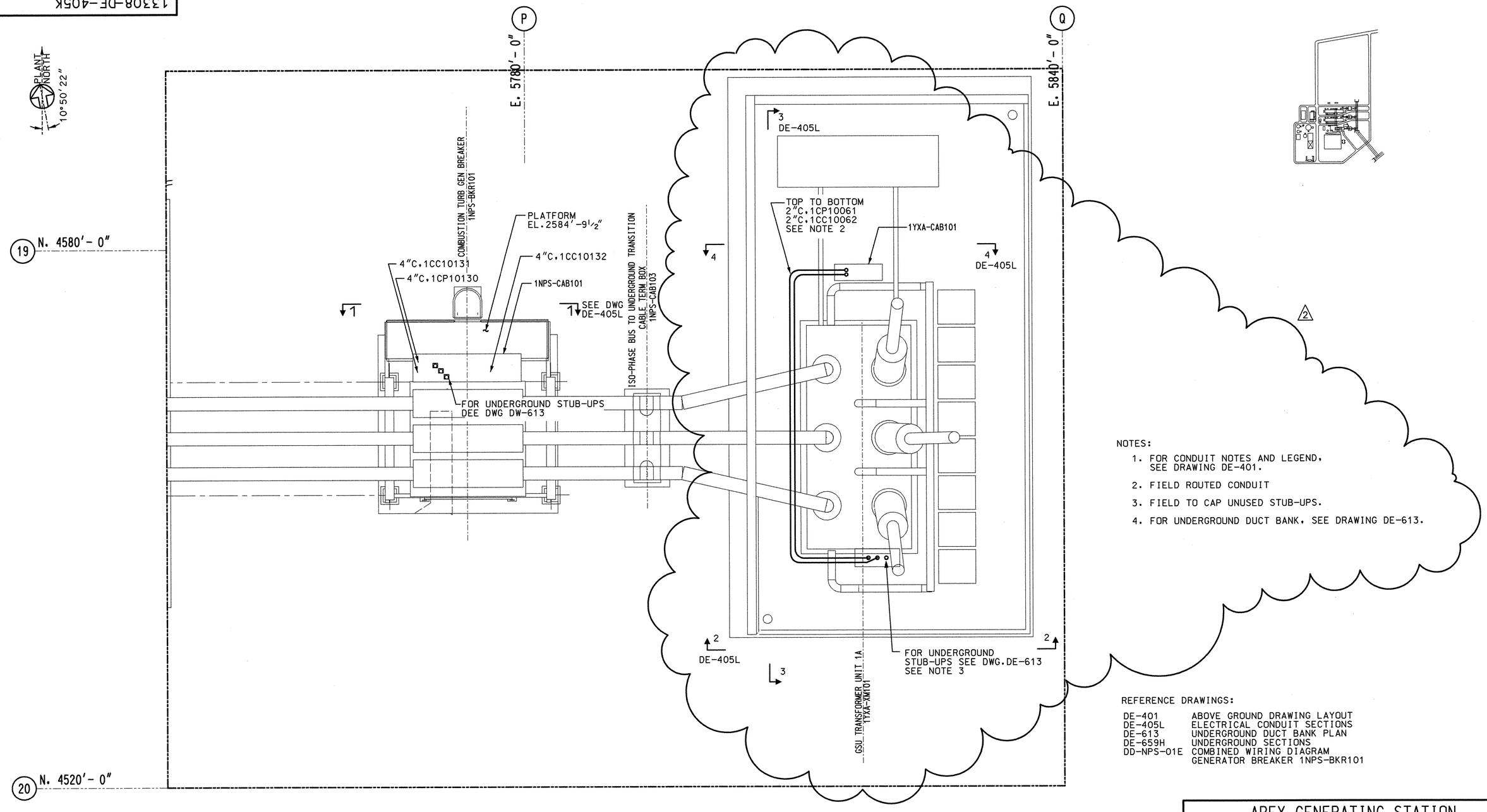

NOTES:

1. FOR CONDUIT NOTES AND LEGEND, SEE DRAWING DE-401.
2. FIELD ROUTED CONDUIT
3. FIELD TO CAP UNUSED STUB-UPS.
4. FOR UNDERGROUND DUCT BANK, SEE DRAWING DE-613.

REFERENCE DRAWINGS:

DE-401	ABOVE GROUND DRAWING LAYOUT
DE-405L	ELECTRICAL CONDUIT SECTIONS
DE-613	UNDERGROUND DUCT BANK PLAN
DE-659H	UNDERGROUND SECTIONS
DD-NPS-01E	COMBINED WIRING DIAGRAM GENERATOR BREAKER 1NPS-BKR101

GSU ENLARGED PLAN

PLAN EL.2563'-6"

0 2' 4' 8' 12' 16'

SCALE: 3/16"=1'-0"

REVISION	DESCRIPTION	CHECKED		REVISION	DESCRIPTION	CHECKED		REVISION	DESCRIPTION	CHECKED		REVISION	DESCRIPTION	CHECKED	
		CORRECT		2	RE-ISSUED FOR CONSTRUCTION REVISED CONDUIT STUB-UPS FOR XFMR & GEN BKR	LJS	7/2/02	1	ISSUED FOR CONSTRUCTION REVISED CONDUIT STUB-UPS FOR XFMR & GEN BKR	LJS	4/12/02	0	ISSUED FOR CONSTRUCTION	LJS	3/1/02
						CORRECT				CORRECT				CORRECT	
							7/2/02			TLR	4/12/02			JV	3/1/02
		APPR	DATE			APPR	DATE			APPR	DATE			APPR	DATE
						RAM	7/2/02			MP	4/12/02			MP	3/1/02

SCANNED JUL 03 2002

APEX GENERATING STATION UNIT NO. 1

ELECTRICAL CONDUIT PLAN AREA 400 COMB TURBINE 1ACTS-CTG101 (NORTH)

MIRANT CORPORATION
CLARK COUNTY, NEVADA

STONE & WEBSTER A SHAW GROUP COMPANY

DRAWING NO. 13308-DE-405K-2

DESIGNED BY T.ROBINSON	DRAWN BY T.ROBINSON	CAD MODEL	LEVELS	WORK PKG	PCT
DSGN CHK'D BY W.GEBAUER	CHK'D BY L.STANEVICH	de405k.dgn			

RESP. ENGR: M.PRAWL
SUPV: L.STANEVICH

SHT No.	DESCRIPTION	REV No.
/1	CIRCUIT DIAGRAM OF COOLER MOTORS	
/2	CIRCUIT DIAGRAM OF COOLER CONTROLS AND ANCILLARIES	
/3	CIRCUIT DIAGRAM OF ALARMS AND TRIPS	
/4	DIAGRAMMATIC ARRANGEMENT OF CURRENT TRANSFORMERS	
/5	DIAGRAM OF MARSHALLING CUBICLE COMPONENT MASTERS	
/6	DIAGRAM OF MARSHALLING CUBICLE COMPONENT MASTERS	
/7	DIAGRAM OF TRANSFORMER AUXILIARY COMPONENT MASTERS	
/8	DIAGRAM OF TRANSFORMER EXTERNAL WIRING MASTERS	
/9	EXTERNAL WIRING SCHEDULE	
/10	MARSHALLING CUBICLE PARTS LIST	
/11	MARSHALLING CUBICLE PARTS LIST	
/12	TRANSFORMER AUXILIARIES PARTS LIST	
/13	TERMINAL LAYOUT FOR MARSHALLING CUBICLE	
/14	TERMINAL LAYOUT FOR TRANSFORMER AUXILIARIES	
/15	MARSHALLING CUBICLE WIRING SCHEDULE (1-150)	
/16	MARSHALLING CUBICLE WIRING SCHEDULE (151-222)	

F CONTROLLED COPY

©COPYRIGHT 2001
PEEBLES TRANSFORMERS LIMITED

THIS DRAWING IS CONFIDENTIAL AND IS THE PROPERTY OF PEEBLES TRANSFORMERS LIMITED AND IS NOT TO BE COPIED OR IN ANY WAY MADE USE OF WITHOUT THE EXPRESS PERMISSION OF THE PROPRIETORS.

REV	SIG & DATE	REV	SIG & DATE	REV	SIG & DATE	REV	SIG & DATE

REVISIONS

DATE	15-08-2001
JOB No.	C00035_01
DRAWN	G. RUSSELL
CHECKED	F. O REILLY
APPROVED	F. O REILLY

MIRANT

Peebles Transformers Limited. Edinburgh. Scotland

PROJECT:- MIRANT CORPORATION - APEX PROJECT, NEVADA

COVER SHEET FOR SCHEMATICS
FOR A 215 MVA., 525/18 kV., OA/FA/FA COOLED, 3 PHASE, 60 Hz., GENERATOR TRANSFORMER.

DRAWING No.	SHEET	CONT	REV	SCALE	DDSC
621430_C00035_01	0TP1	1			A3

russelgr 16.08.2001 11:39:48 7828_0TP1

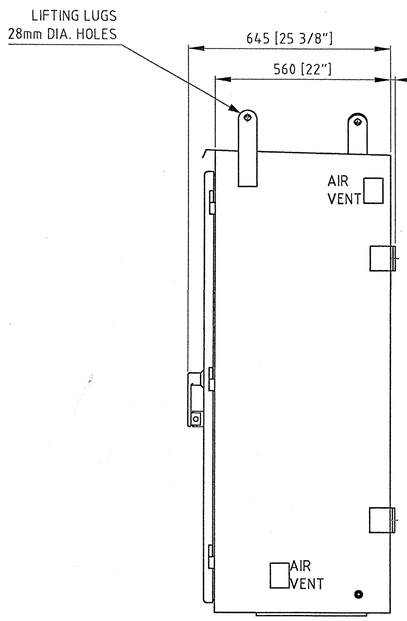

END VIEW

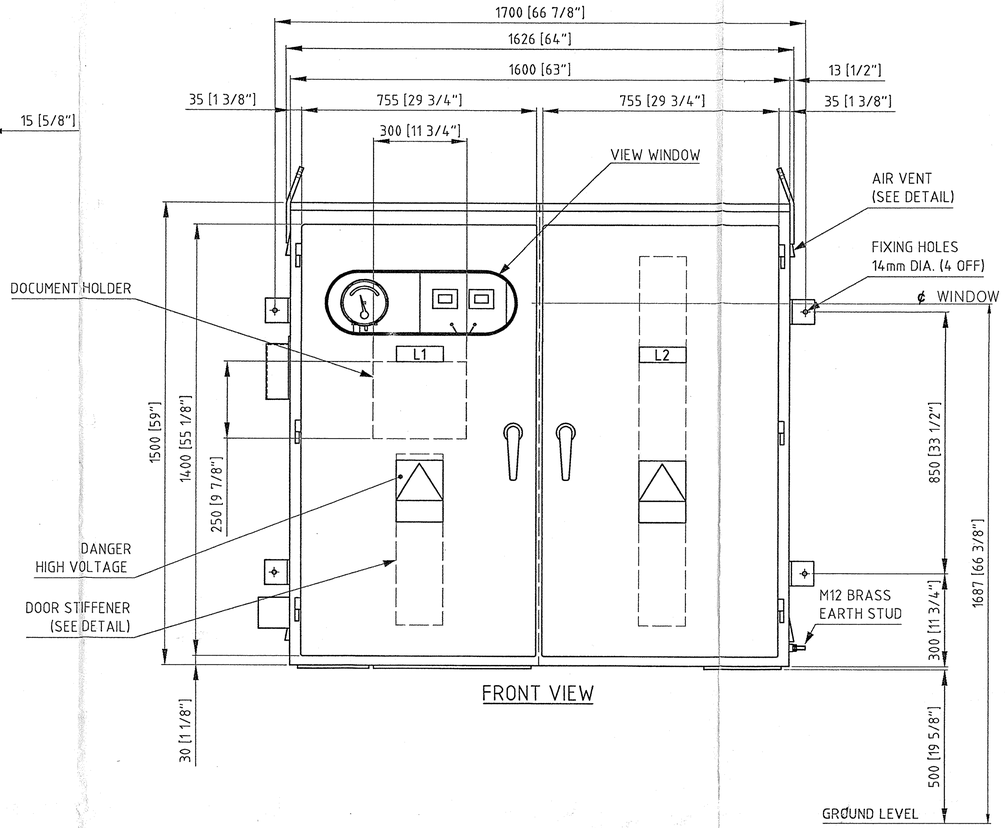

FRONT VIEW

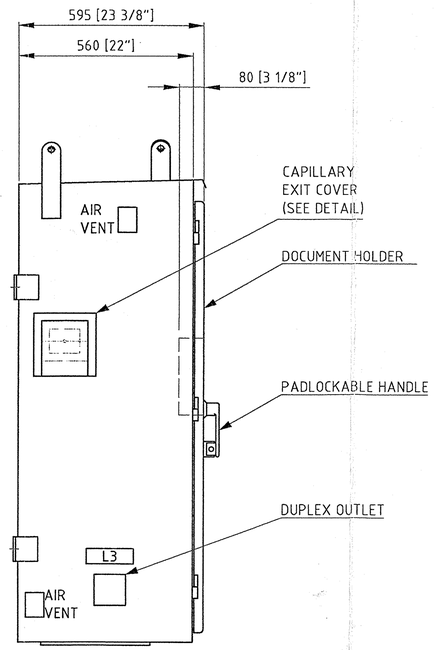

END VIEW

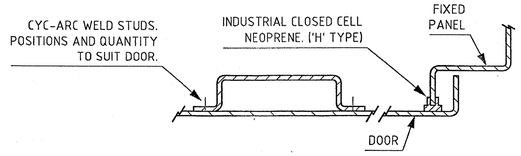

DETAIL OF DOOR STIFFENER AND SEAL.
(NOT TO SCALE).

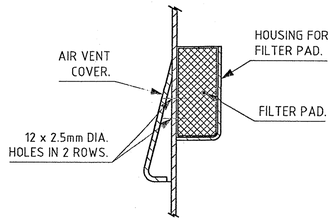

DETAIL OF AIR VENT.
(SCALE 1 : 2)

	LABEL TABLE
L1	TEMPERATURE INDICATION AUXILIARIES/TERMINALS
L2	COOLER 'A' CONTROLS COOLER 'B' CONTROLS
L3	DUPLEX OUTLET

NOTES:-

1. CUBICLE TO BE WEATHERPROOF TO NEMA TYPE 3R.
2. FINISH AND PAINTING PROCEDURE FOR CUBICLE:-
   a) EXTERNAL SURFACES TO BE PAINTED IN ACCORDANCE WITH E.A.T.S. 98-1, SCHEMES 2 & 3.
   FINISH:- ANSI LIGHT GRAY, COLOUR No. 70.
   TOTAL D.F.T.:- 70 - 95 MICRONS.
   EXTERNAL:- GLOSS.
   INTERNAL SURFACES TO BE ANTI-CONDENSATION.
   b) INTERNAL MOUNTING PLATES TO BE PAINTED IN ACCORDANCE WITH E.A.T.S. 98-1, SCHEME 4.
   INTERNAL FINISH:- GLOSS WHITE.
3. LABELS:- MAIN & ; STAINLESS STEEL.
   EXTERNAL SUBSIDIARY WHITE LETTERS ON BLACK BACKGROUND.
   INTERNAL SUBSIDIARY ; BLACK/WHITE/BLACK TRAFFOLYTE.
4. CUT-OUTS TO BE PROVIDED BETWEEN COMPARTMENTS FOR INTER-COMPARTMENT WIRING.
5. TERMINALS SHOWN WITH SHORTING LINKS IN THE CLOSED POSITION.
6. OUTER DOORS & HINGED PANEL TO HAVE PADLOCKING FACILITIES.
7. DOORS TO BE FITTED WITH STAYS TO SECURE AT 90° WHEN OPEN.
8. ALL DIMENSIONS IN MILLIMETRES WITH IMPERIAL IN BRACKETS.
9. CUBICLE TO BE FABRICATED USING 2.5mm (MIN) ZINTEC.
10. ALL EXTERNAL FIXINGS & FITTINGS TO BE NON-CORROSIVE.
11. CUBICLE APPROXIMATE WEIGHT :- 550 KILOGRAMMES (1210 POUNDS).

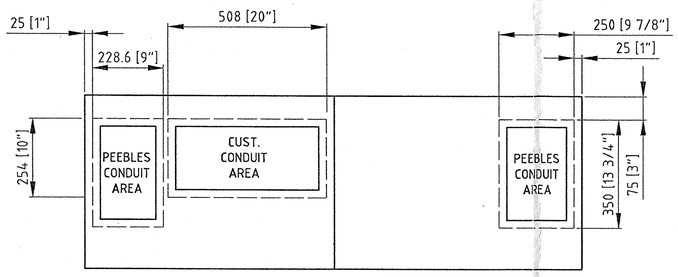

CUBICLE BASE
CONDUIT ENTRY DETAILS

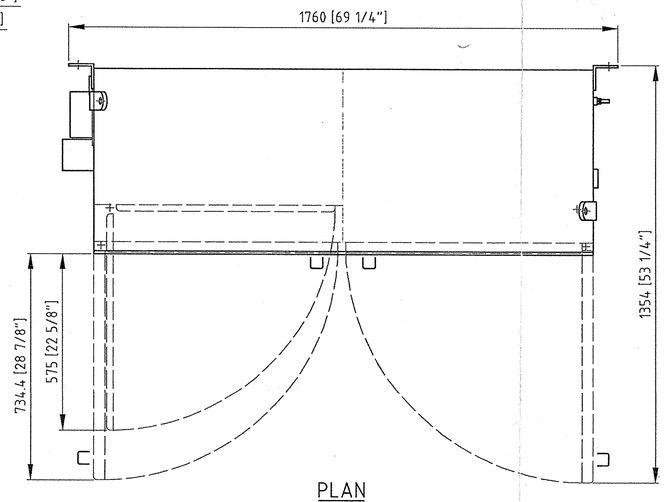

PLAN
DETAILING DOOR SWING

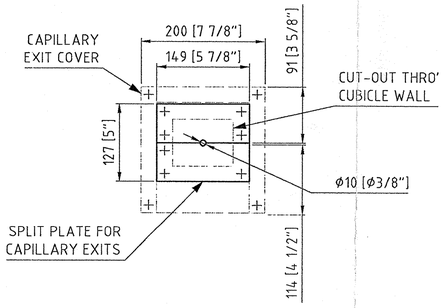

DETAIL OF CAPILLARY EXITS
(SCALE 1:5)

REVISION CONTROLLED COPY

REV		Date	Name
01	Revised		
	Checked		
	Approved		
MODIFICATION 1			

REV		Date	Name
02	Revised		
	Checked		
	Approved		
MODIFICATION 2			

REV		Date	Name
03	Revised		
	Checked		
	Approved		
MODIFICATION 3			

REV		Date	Name
04	Revised		
	Checked		
	Approved		
MODIFICATION 4			

REV		Date	Name
05	Revised		
	Checked		
	Approved		
MODIFICATION 5			

REV		Date	Name
06	Revised		
	Checked		
	Approved		
MODIFICATION 6			

REV		Date	Name
07	Revised		
	Checked		
	Approved		
MODIFICATION 7			

VA TECH

Peebles Transformers Limited
Edinburgh EH5 7AN Scotland

This drawing and any copies of this drawing are at all times the property of VA TECH Peebles Transformers Ltd. The Proprietors hereby notify that it is strictly prohibited for this drawing to be copied or used for any purpose nor its contents disclosed to others without their express permission.

© Copyright 2000
VA TECH Peebles Transformers Limited

	Date	Name
Drawn	16-08-2001	P.Thanson
Checked	16-08-2001	F. O'Reilly
Approved	16-08-2001	F. O'Reilly
Design		
Filename	621400_C035_01	
Scale 1:10	Order No. C035 01	

MIRANT

Reference Drawings
SCHEMATIC DIAGRAMS - 621430_C00035_01

Drawing Title
G/A OF MARSH. CUBICLE (EX.)
FOR A 215MVA., 525/18 kV.,
OA/FA/FA COOLED, GEN. TRANSF.

Drawing No. 621400_C035_01
Sheet 1 of 2
Revision 00

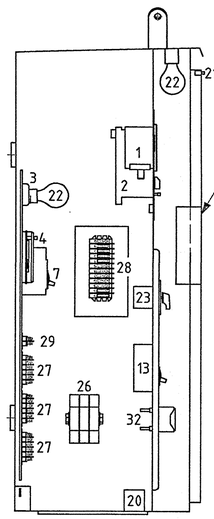

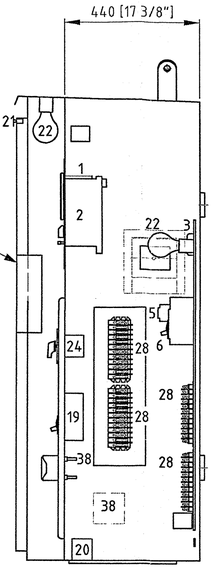

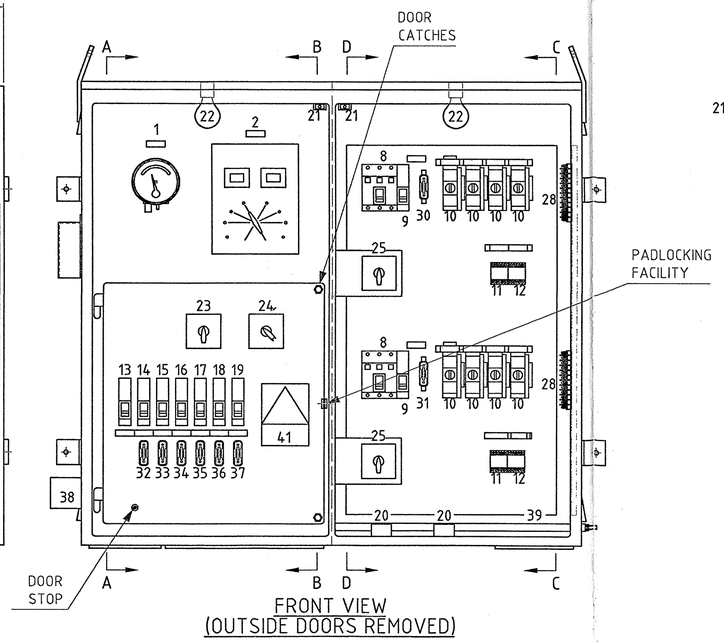

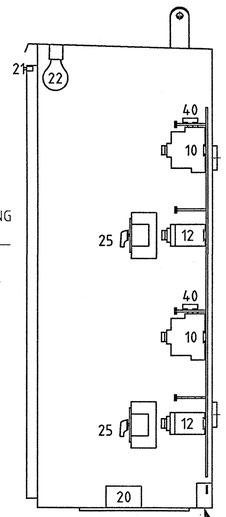

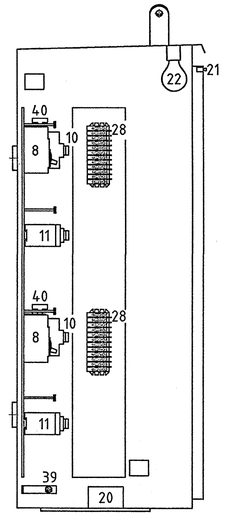

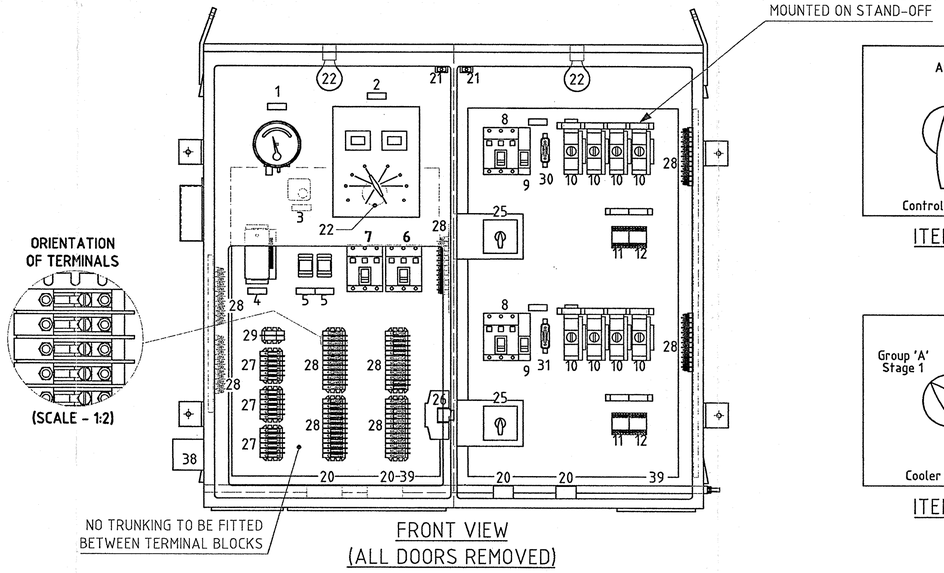

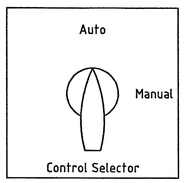

ITEM 23

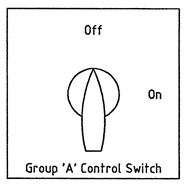

ITEM 25

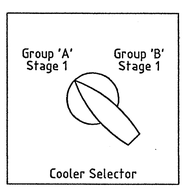

ITEM 24

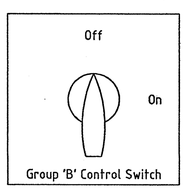

ITEM 25

ITEM	DESCRIPTION	SUPPLIER	TYPE
1	OIL/WINDING TEMP. INDICATOR OIL TEMPERATURE	QUALITROL INSTRUMENTS	104-12A1
2	ELECTRONIC TEMP. INDICATOR LV WINDING	QUALITROL INSTRUMENTS	109-026-02
3	THERMOSTAT	R.S.COMPONENTS	375-0146
4	RAPID PRESS. RISE SEAL IN-RELAY	QUALITROL	909-200-01
5	WINDING TEMP.IND. REPEAT RELAY	TELEMECANIQUE	CA3-DN40GD
6	COOLER SUPPLY CIRCUIT BREAKER	SQUARE D	FAL34060V
7	COOLER CONTROLS CIRCUIT BREAKER	SQUARE D	FAL 34020V
8	COOLER CIRCUIT BREAKER	SQUARE D	FAL 34020V
9	COOLER CIRCUIT BREAKER 120 V.AC. CONTROL	SQUARE D	FAL 14015
10	FAN MOTOR STARTERS	TELEMECANIQUE	LD1-LB030FC/ LA1-LB017
11	SUPPLY SUPERVISION RELAY	CROMPTON INSTRUMENTS	252-PVK
12	COOLER SUPPLY FAIL RELAY	CROMPTON INSTRUMENTS	252-PVU
13	CIRCUIT BREAKER 120V. AC. CONV. OUTLET	SQUARE D	QO120GF1
14	CIRCUIT BREAKER 120V. AC. HEATER	SQUARE D	FAL 14015
15	CIRCUIT BREAKER 120V. AC. LIGHTS	SQUARE D	FAL 14015
16	CIRCUIT BREAKER ST.1 TEMP. CONTROL 125V. DC.	SQUARE D	FAL 14015
17	CIRCUIT BREAKER ST.2 TEMP. CONTROL 125V. DC.	SQUARE D	FAL 14015
18	CIRCUIT BREAKER 125V. DC. W.T. MONITOR	SQUARE D	FAL 14015
19	CIRCUIT BREAKER RAPID PRESS. RISE SEAL IN-RELAY	SQUARE D	FAL 14020
20	MARSHALLING CUBICLE HEATER	R.S. COMPONENTS	605-611
21	DOOR SWITCH CUBICLE LIGHT	R.S. COMPONENTS	301-2286
22	MARSHALLING CUBICLE LIGHT	R.S. COMPONENTS	196-5425/171-067
23	CONTROL SELECTOR SWITCH	CRAIG & DERRICOTT	32AMP DIACAM
24	COOLER SELECTOR SWITCH	CRAIG & DERRICOTT	32AMP DIACAM
25	COOLER CONTROL SWITCH	CRAIG & DERRICOTT	32AMP DIACAM
26	480V. SUPPLY TERMINALS	WEIDMULLER	SAKG3211
27	TERMINALS 6WAY	STATES	NT-FM-25106
28	TERMINALS 12WAY	STATES	NT-25012-PL
29	TERMINALS WTI TEST LINKS	STATES	MTS-202-C-10
30	120V. AC. COOLER A CONTROL	ALSTOM	RS20H [P110 151-10 SOLID LINK]
31	120V. AC. COOLER B CONTROL	ALSTOM	RS20H [P110 151-10 SOLID LINK]
32	120V. AC. HEATERS	ALSTOM	RS20P [P110 151-10 SOLID LINK]
33	120V. AC. LIGHTS	ALSTOM	RS20P [P110 151-10 SOLID LINK]
34	ST1. TEMP. CONTROL 125V. DC.	ALSTOM	RS20P [P110 151-10 SOLID LINK]
35	ST2. TEMP. CONTROL 125V. DC.	ALSTOM	RS20P [P110 151-10 SOLID LINK]
36	125V. DC. WINDING TEMP. MONITOR	ALSTOM	RS20P [P110 151-10 SOLID LINK]
37	RAPID PRESS. RISE RELAY 125V. DC.	ALSTOM	RS20P [P110 151-10 SOLID LINK]
38	DUPLEX SOCKET OUTLET	HARVEY HUBBELL	5463 [ALUM. BOX]
39	EARTH BAR	SUBCONTRACTOR	25mm x 4mm COPPER BAR
40	MOTOR STARTER BUSBAR SYSTEM	TELEMECANIQUE	GV1-G09 / GV2-G472
41	DANGER HIGH VOLTAGE	R.S. COMPONENTS	863-996

FOR NOTES - SEE SHEET 1

REVISION CONTROLLED COPY

REV		Date	Name	MODIFICATION
01	Revised			1
	Checked			
	Approved			
02	Revised			2
	Checked			
	Approved			
03	Revised			3
	Checked			
	Approved			
04	Revised			4
	Checked			
	Approved			
05	Revised			5
	Checked			
	Approved			
06	Revised			6
	Checked			
	Approved			
07	Revised			7
	Checked			
	Approved			

VATECH

Peebles Transformers Limited
Edinburgh EH16 7AN Scotland

This drawing and any copies of this drawing are at all times the property of VA TECH Peebles Transformers Ltd. The Proprietors hereby notify that it is strictly prohibited for this drawing to be copied or used for any purpose nor its contents disclosed to others without their express permission.

© Copyright 2000
VA TECH Peebles Transformers Limited

	Date	Name
Drawn	16-08-2001	P.Thomson
Checked	16-08-2001	F. O'Reilly
Approved	16-08-2001	F. O'Reilly
Design		

Filename: 621400_C035_01
Scale: 1:10
Order No.: C035 01

MIRANT

Reference Drawings
SCHEMATIC DIAGRAMS - 621430_C00035_01

Drawing Title
G/A OF MARSH. CUBICLE (INT.) FOR A 215 MVA., 525/18 kV., OA/FA/FA COOLED, GEN. TRANSF.

Drawing No. 621400_C035_01
Sheet 2 of 2
Revision 00

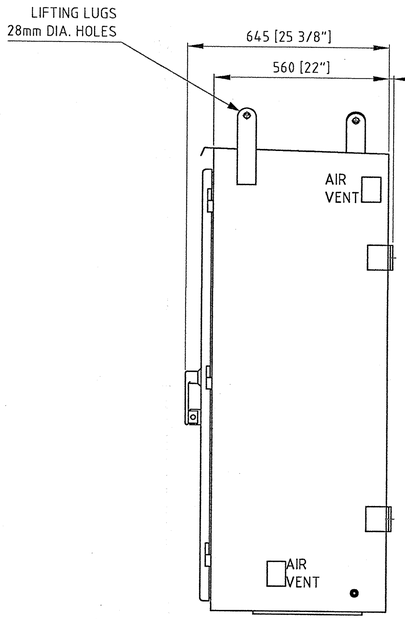

END VIEW

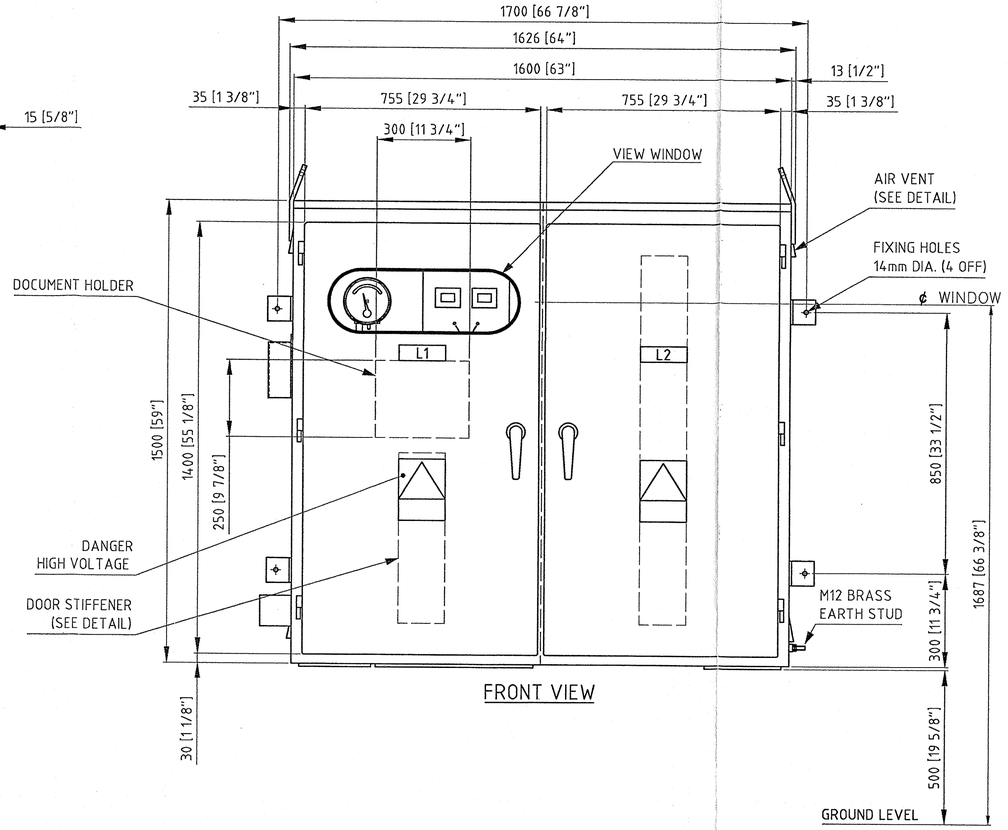

FRONT VIEW

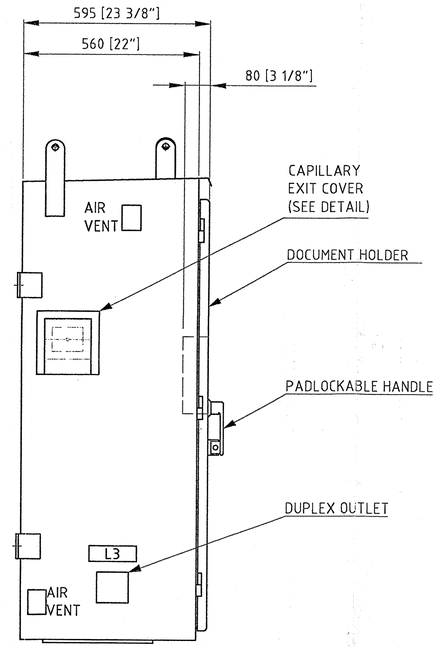

END VIEW

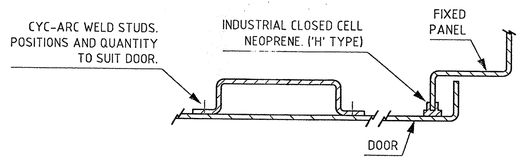

DETAIL OF DOOR STIFFENER AND SEAL.
(NOT TO SCALE).

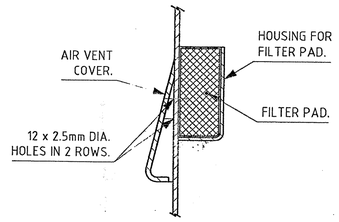

DETAIL OF AIR VENT.
(SCALE 1 : 2)

	LABEL TABLE
L1	TEMPERATURE INDICATION AUXILIARIES/TERMINALS
L2	COOLER 'A' CONTROLS COOLER 'B' CONTROLS
L3	DUPLEX OUTLET

NOTES:-

1. CUBICLE TO BE WEATHERPROOF TO NEMA TYPE 3R.
2. FINISH AND PAINTING PROCEDURE FOR CUBICLE:-
   a) EXTERNAL SURFACES TO BE PAINTED IN ACCORDANCE WITH E.A.T.S. 98-1, SCHEMES 2 & 3.
   FINISH:- ANSI LIGHT GRAY, COLOUR No. 70.
   TOTAL D.F.T.:- 70 - 95 MICRONS.
   EXTERNAL:- GLOSS.
   INTERNAL SURFACES TO BE ANTI-CONDENSATION.
   b) INTERNAL MOUNTING PLATES TO BE PAINTED IN ACCORDANCE WITH E.A.T.S. 98-1, SCHEME 4.
   INTERNAL FINISH:- GLOSS WHITE.
3. LABELS:- MAIN & ; STAINLESS STEEL.
   EXTERNAL SUBSIDIARY WHITE LETTERS ON BLACK BACKGROUND.
   INTERNAL SUBSIDIARY ; BLACK/WHITE/BLACK TRAFFOLYTE.
4. CUT-OUTS TO BE PROVIDED BETWEEN COMPARTMENTS FOR INTER-COMPARTMENT WIRING.
5. TERMINALS SHOWN WITH SHORTING LINKS IN THE CLOSED POSITION.
6. OUTER DOORS & HINGED PANEL TO HAVE PADLOCKING FACILITIES.
7. DOORS TO BE FITTED WITH STAYS TO SECURE AT 90° WHEN OPEN.
8. ALL DIMENSIONS IN MILLIMETRES WITH IMPERIAL IN BRACKETS.
9. CUBICLE TO BE FABRICATED USING 2.5mm (MIN) ZINTEC.
10. ALL EXTERNAL FIXINGS & FITTINGS TO BE NON-CORROSIVE.
11. CUBICLE APPROXIMATE WEIGHT :- 550 KILOGRAMMES (1210 POUNDS).

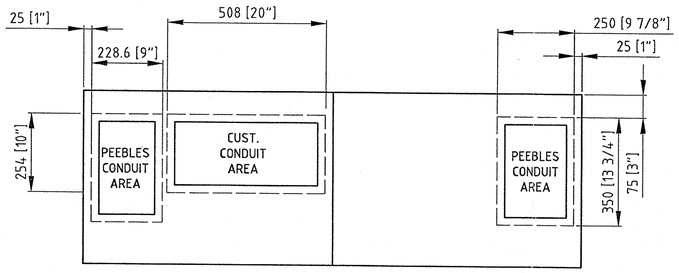

CUBICLE BASE
CONDUIT ENTRY DETAILS

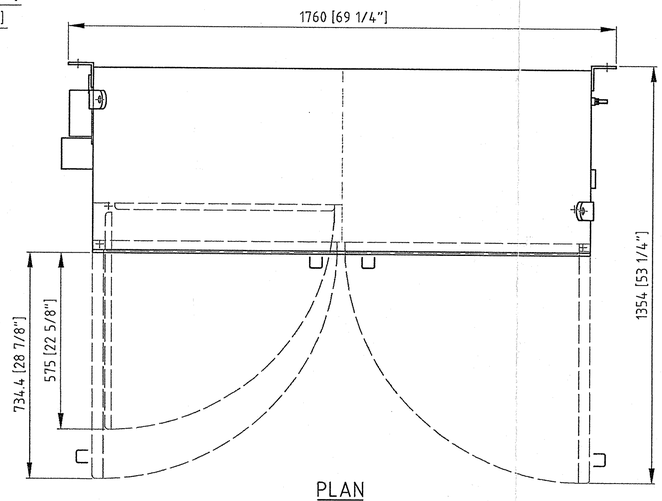

PLAN
DETAILING DOOR SWING

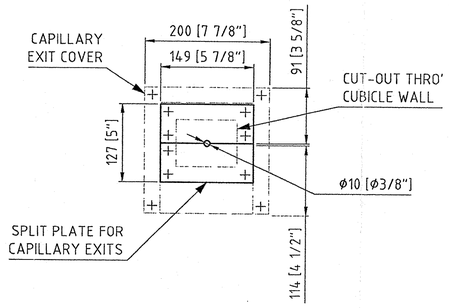

DETAIL OF CAPILLARY EXITS
(SCALE 1:5)

REVISION CONTROLLED COPY

REV		Date	Name
01	Revised		
	Checked		
	Approved		
MODIFICATION 1			
02	Revised		
	Checked		
	Approved		
MODIFICATION 2			
03	Revised		
	Checked		
	Approved		
MODIFICATION 3			
04	Revised		
	Checked		
	Approved		
MODIFICATION 4			
05	Revised		
	Checked		
	Approved		
MODIFICATION 5			
06	Revised		
	Checked		
	Approved		
MODIFICATION 6			
07	Revised		
	Checked		
	Approved		
MODIFICATION 7			
MODIFICATION 8			
MODIFICATION 9			

VA TECH
Peebles Transformers Limited
Edinburgh EH26 7AH Scotland

This drawing and any copies of this drawing are at all times the property of VA TECH Peebles Transformers Ltd. The Proprietors hereby notify that it is strictly prohibited for this drawing to be copied or used for any purpose nor its contents disclosed to others without their express permission.

© Copyright 2000
VA TECH Peebles Transformers Limited

	Date	Name
Drawn	16-08-2001	P.Thomson
Checked	16-08-2001	F. O'Reilly
Approved	16-08-2001	F. O'Reilly
Design		
Filename	621400_C035_03	
Scale 1:10	Order No. C035 03	

MIRANT

Reference Drawings
SCHEMATIC DIAGRAMS - 621430_C00035_03

Drawing Title
G/A OF MARSH. CUBICLE (EX.)
FOR A 270MVA., 525/18 kV.,
OA/FA/FA COOLED, GEN. TRANSF.

Drawing No.
621400_C035_03

Sheet 1 of 2
Revision 00

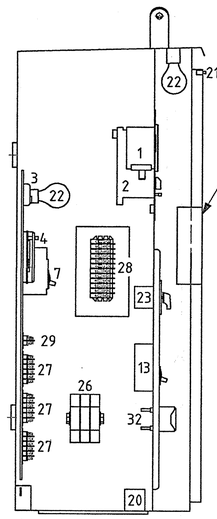

SECTION 'A' - 'A'

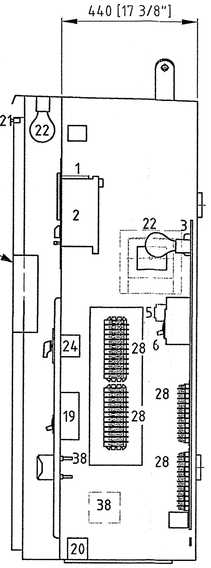

SECTION 'B' - 'B'

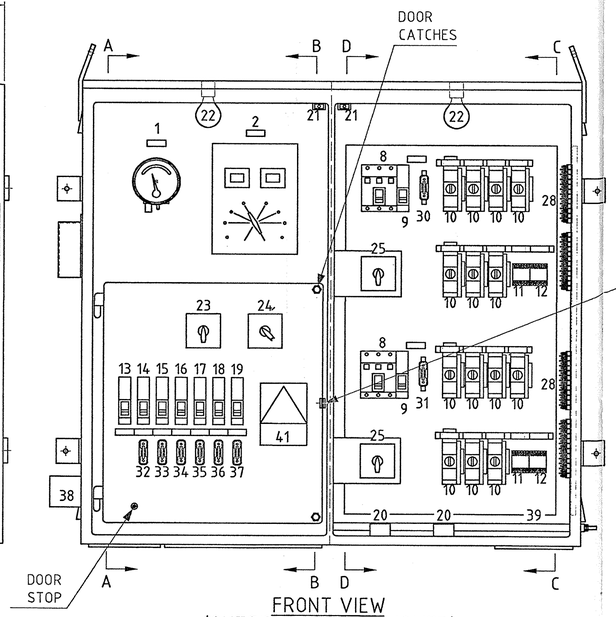

FRONT VIEW
(OUTSIDE DOORS REMOVED)

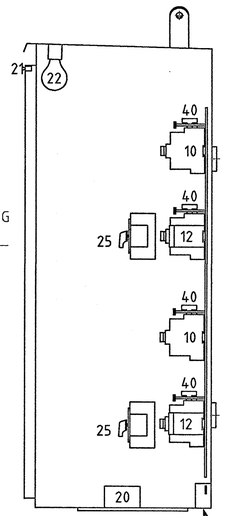

SECTION 'C' - 'C'

SEE NOTE 4

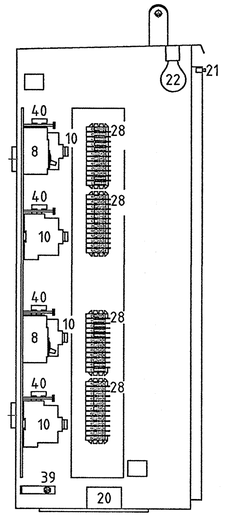

SECTION 'D' - 'D'

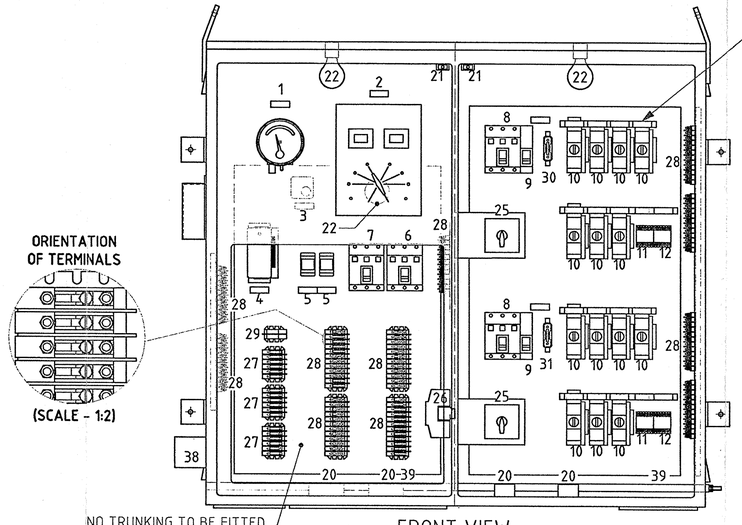

FRONT VIEW
(ALL DOORS REMOVED)

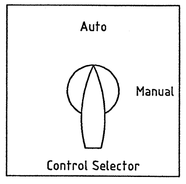

ITEM 23

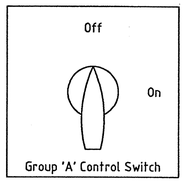

ITEM 25

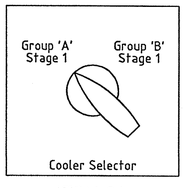

ITEM 24

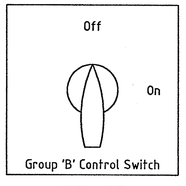

ITEM 25

ITEM	DESCRIPTION	SUPPLIER	TYPE
1	OIL/WINDING TEMP. INDICATOR OIL TEMPERATURE	QUALITROL INSTRUMENTS	104-12A1
2	ELECTRONIC TEMP. INDICATOR LV WINDING	QUALITROL INSTRUMENTS	109-026-02
3	THERMOSTAT	R.S.COMPONENTS	375-0146
4	RAPID PRESS. RISE SEAL IN-RELAY	QUALITROL	909-200-01
5	WINDING TEMP.IND. REPEAT RELAY	TELEMECANIQUE	CA3-DN40GD
6	COOLER SUPPLY CIRCUIT BREAKER	SQUARE D	FAL34080V
7	COOLER CONTROLS CIRCUIT BREAKER	SQUARE D	FAL 34020V
8	COOLER CIRCUIT BREAKER	SQUARE D	FAL 34030V
9	COOLER CIRCUIT BREAKER 120 V.AC. CONTROL	SQUARE D	FAL 14015
10	FAN MOTOR STARTERS	TELEMECANIQUE	LD1 -LB030FC/ LA1-LB017
11	SUPPLY SUPERVISION RELAY	CROMPTON INSTRUMENTS	252-PVK
12	COOLER SUPPLY FAIL RELAY	CROMPTON INSTRUMENTS	252-PVU
13	CIRCUIT BREAKER 120V. AC. CONV. OUTLET	SQUARE D	QO120GF1
14	CIRCUIT BREAKER 120V. AC. HEATER	SQUARE D	FAL 14015
15	CIRCUIT BREAKER 120V. AC. LIGHTS	SQUARE D	FAL 14015
16	CIRCUIT BREAKER ST.1 TEMP. CONTROL 125V. DC.	SQUARE D	FAL 14015
17	CIRCUIT BREAKER ST.2 TEMP. CONTROL 125V. DC.	SQUARE D	FAL 14015
18	CIRCUIT BREAKER 125V. DC. W.T. MONITOR	SQUARE D	FAL 14015
19	CIRCUIT BREAKER RAPID PRESS. RISE SEAL IN-RELAY	SQUARE D	FAL 14020
20	MARSHALLING CUBICLE HEATER	R.S. COMPONENTS	605-611
21	DOOR SWITCH CUBICLE LIGHT	R.S. COMPONENTS	301-2286
22	MARSHALLING CUBICLE LIGHT	R.S. COMPONENTS	196-5425/171-067
23	CONTROL SELECTOR SWITCH	CRAIG & DERRICOTT	32AMP DIACAM
24	COOLER SELECTOR SWITCH	CRAIG & DERRICOTT	32AMP DIACAM
25	COOLER CONTROL SWITCH	CRAIG & DERRICOTT	32AMP DIACAM
26	480V. SUPPLY TERMINALS	WEIDMULLER	SAKG3211
27	TERMINALS 6WAY	STATES	NT-FM-25106
28	TERMINALS 12WAY	STATES	NT-25012-PL
29	TERMINALS WTI TEST LINKS	STATES	MTS-202-C-10
30	120V. AC. COOLER A CONTROL	ALSTOM	RS20H [P110 151-10 SOLID LINK]
31	120V. AC. COOLER B CONTROL	ALSTOM	RS20H [P110 151-10 SOLID LINK]
32	120V. AC. HEATERS	ALSTOM	RS20P [P110 151-10 SOLID LINK]
33	120V. AC. LIGHTS	ALSTOM	RS20P [P110 151-10 SOLID LINK]
34	ST1. TEMP. CONTROL 125V. DC.	ALSTOM	RS20P [P110 151-10 SOLID LINK]
35	ST2. TEMP. CONTROL 125V. DC.	ALSTOM	RS20P [P110 151-10 SOLID LINK]
36	125V. DC. WINDING TEMP. MONITOR	ALSTOM	RS20P [P110 151-10 SOLID LINK]
37	RAPID PRESS. RISE RELAY 125V. DC.	ALSTOM	RS20P [P110 151-10 SOLID LINK]
38	DUPLEX SOCKET OUTLET	HARVEY HUBBELL	5463 [ALUM. BOX]
39	EARTH BAR	SUBCONTRACTOR	25mm x 4mm COPPER BAR
40	MOTOR STARTER BUSBAR SYSTEM	TELEMECANIQUE	GV1-G09 / GV2-G472
41	DANGER HIGH VOLTAGE	R.S. COMPONENTS	863-996

FOR NOTES - SEE SHEET 1

REVISION CONTROLLED COPY

REV		Date	Name
01	Revised		
	Checked		
	Approved		
02	Revised		
	Checked		
	Approved		
03	Revised		
	Checked		
	Approved		
04	Revised		
	Checked		
	Approved		
05	Revised		
	Checked		
	Approved		
06	Revised		
	Checked		
	Approved		
07	Revised		
	Checked		
	Approved		

MODIFICATION 1 | MODIFICATION 2 | MODIFICATION 3 | MODIFICATION 4 | MODIFICATION 5 | MODIFICATION 6 | MODIFICATION 7 | MODIFICATION 8 | MODIFICATION 9

VATECH

Peebles Transformers Limited
Edinburgh EH6 7AH Scotland

This drawing and any copies of this drawing are at all times the property of VA TECH Peebles Transformers Ltd. The Proprietors hereby notify that it is strictly prohibited for this drawing to be copied or used for any purpose nor its contents disclosed to others without their express permission.

© Copyright 2000
VA TECH Peebles Transformers Limited

	Date	Name
Drawn	16-08-2001	P.Thomson
Checked	16-08-2001	F. O'Reilly
Approved	16-08-2001	F. O'Reilly
Design		
Filename	621400_C035_03	
Scale 1:10	Order No. C035 03	

MIRANT

Reference Drawings
SCHEMATIC DIAGRAMS - 621430_C00035_03

Drawing Title
G/A OF MARSH. CUBICLE (INT.) FOR A 270 MVA., 525/18 kV., OA/FA/FA COOLED, GEN. TRANSF.

Drawing No. 621400_C035_03
Sheet 2 of 2
Revision 00

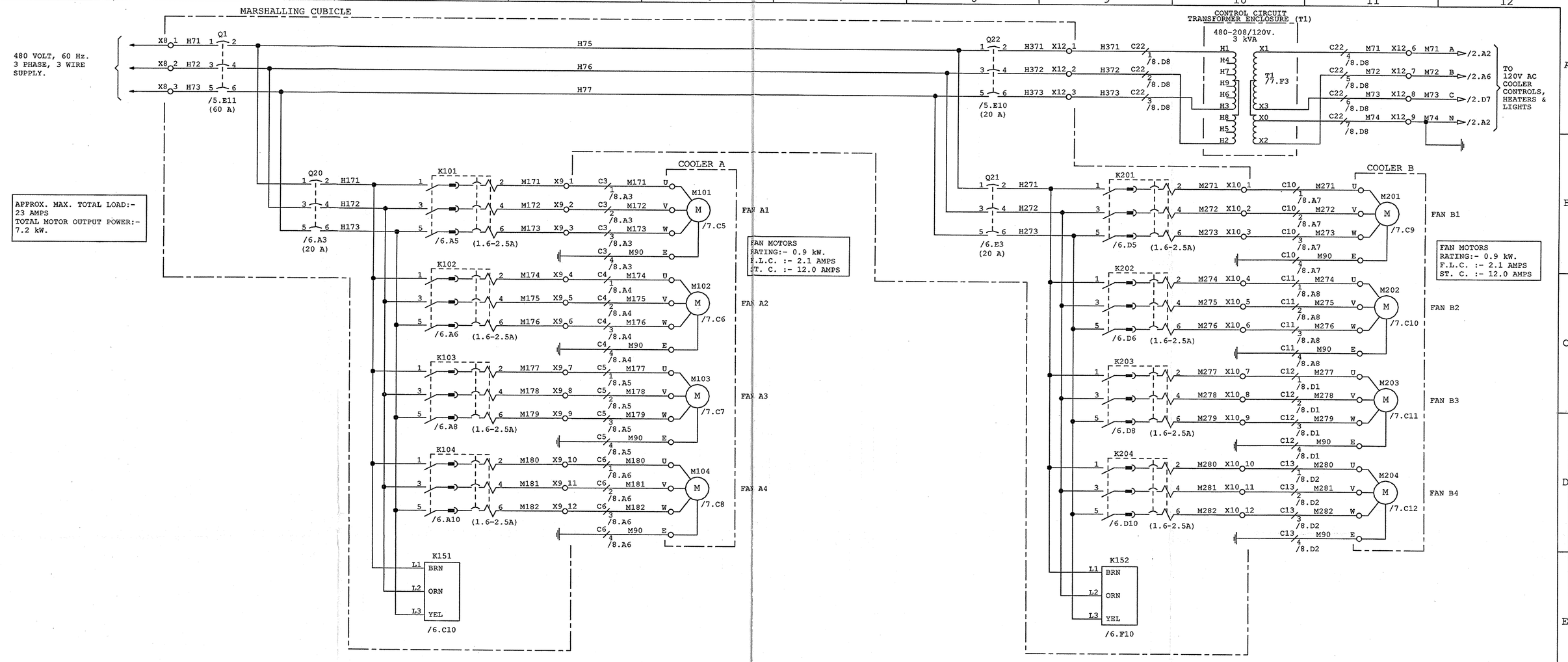

NOTES:-

1. ALL EQUIPMENT SHOWN IN THE OFF OR DE-ENERGISED CONDITION.
2. DRAWING SYMBOLS SHOWN ARE IN ACCORDANCE WITH ANSI/IEEE STD. 315A, (IEC SUPPLEMENT).
3. WHERE WORKING VOLTAGE EXCEEDS 125 VOLTS, ALL TERMINALS TO BE FULLY SHROUDED.
4. FOR DIAGRAM OF MARSH. CUBICLE COMPONENT MASTER SYMBOLS - SEE SHEETS 5 & 6.
5. FOR MARSHALLING CUBICLE PARTS LIST - SEE SHEETS 10 & 11.

DOCUMENT CONTROLLED COPY

© COPYRIGHT 2001
PEEBLES TRANSFORMERS LIMITED

THIS DRAWING IS CONFIDENTIAL AND IS THE PROPERTY OF PEEBLES TRANSFORMERS LIMITED AND IS NOT TO BE COPIED OR IN ANY WAY MADE USE OF WITHOUT THE EXPRESS PERMISSION OF THE PROPRIETORS.

REV	SIG & DATE	REV	SIG & DATE	REV	SIG & DATE	REV	SIG & DATE	REV	SIG & DATE	REV	SIG & DATE	REV	SIG & DATE	REV	SIG & DATE	REV	SIG & DATE

REVISIONS	
DATE	15-08-2001
JOB No.	C00035_01
DRAWN	G. RUSSELL
CHECKED	F. O REILLY
APPROVED	F. O REILLY

Peebles Transformers Limited. Edinburgh. Scotland

PROJECT:- MIRANT CORPORATION - APEX PROJECT, NEVADA

CIRCUIT DIAGRAM OF COOLER MOTORS
FOR A 215 MVA., 525/18 kV., OA/FA/FA COOLED, 3 PHASE,
60 Hz., GENERATOR TRANSFORMER.

DRAWING No.	SHEET	CONT	REV	SCALE	DDSC
621430_C00035_01	1	2			A1

russelgr 16.08.2001 11:39:48 7828_1

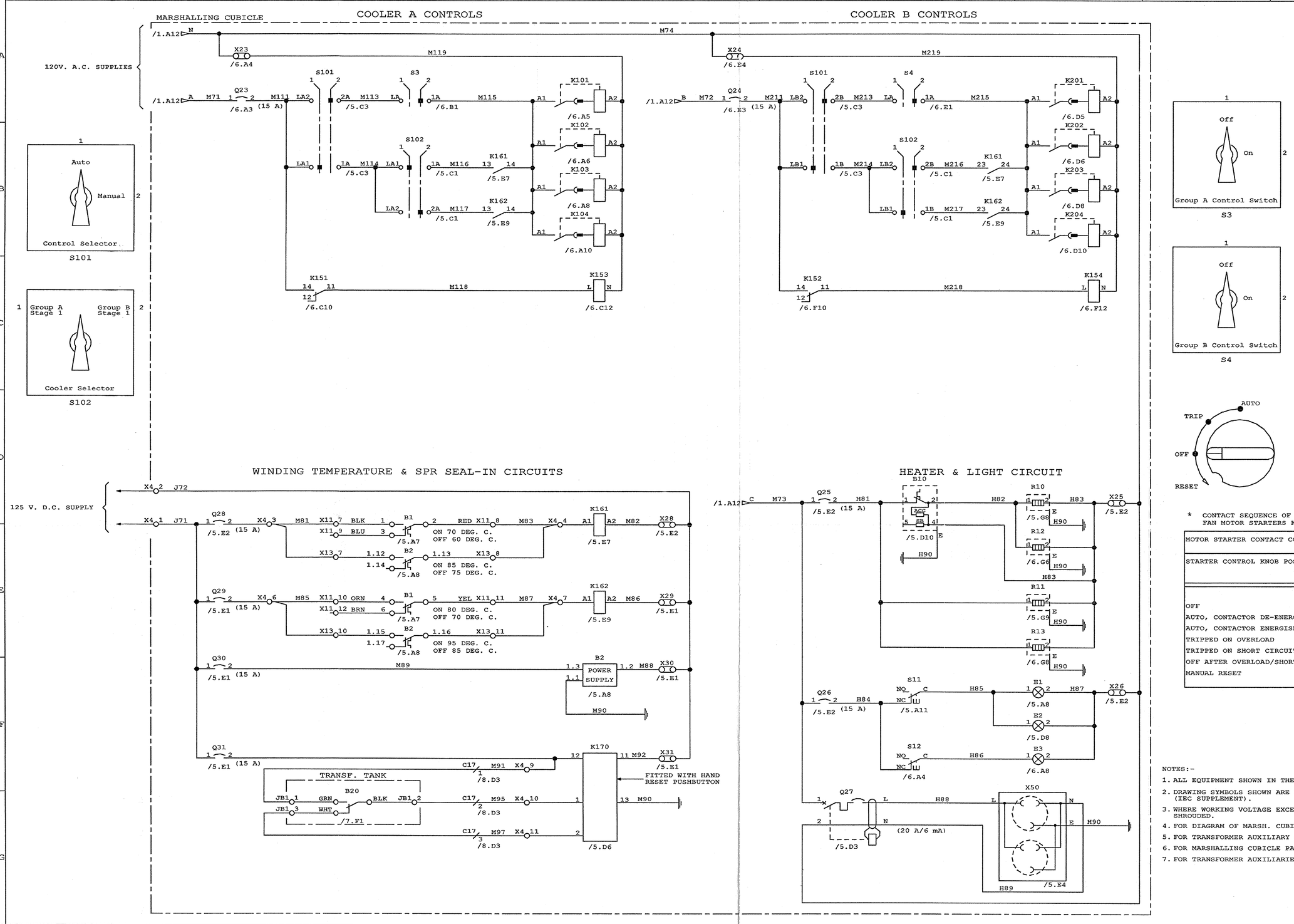

* CONTACT SEQUENCE OF OPERATION FOR FAN MOTOR STARTERS K101-107 & K201-207 :-

MOTOR STARTER CONTACT CONFIGURATION	
STARTER CONTROL KNOB POSITION	CONTACT STATE
OFF	OPEN
AUTO, CONTACTOR DE-ENERGISED	CLOSED
AUTO, CONTACTOR ENERGISED	CLOSED
TRIPPED ON OVERLOAD	OPEN
TRIPPED ON SHORT CIRCUIT	OPEN
OFF AFTER OVERLOAD/SHORT CIRCUIT	OPEN
MANUAL RESET	OPEN

REVISION CONTROLLED COPY

NOTES:-

1. ALL EQUIPMENT SHOWN IN THE OFF OR DE-ENERGISED CONDITION.
2. DRAWING SYMBOLS SHOWN ARE IN ACCORDANCE WITH ANSI/IEEE STD. 315A, (IEC SUPPLEMENT).
3. WHERE WORKING VOLTAGE EXCEEDS 125 VOLTS, ALL TERMINALS TO BE FULLY SHROUDED.
4. FOR DIAGRAM OF MARSH. CUBICLE COMP. MASTER SYMBOLS - SEE SHEETS 5 & 6.
5. FOR TRANSFORMER AUXILIARY COMPONENT MASTERS - SEE SHEET 7.
6. FOR MARSHALLING CUBICLE PARTS LIST - SEE SHEET 10 & 11.
7. FOR TRANSFORMER AUXILIARIES PARTS LIST - SEE SHEET 12.

© COPYRIGHT 2001
PEEBLES TRANSFORMERS LIMITED

THIS DRAWING IS CONFIDENTIAL AND IS THE PROPERTY OF PEEBLES TRANSFORMERS LIMITED AND IS NOT TO BE COPIED OR IN ANY WAY MADE USE OF WITHOUT THE EXPRESS PERMISSION OF THE PROPRIETORS.

REV	SIG & DATE	REV	SIG & DATE	REV	SIG & DATE	REV	SIG & DATE	REV	SIG & DATE	REV	SIG & DATE	REV	SIG & DATE	REV	SIG & DATE	REV	SIG & DATE

REVISIONS	
DATE	15-08-2001
JOB No.	C00035_01
DRAWN	G. RUSSELL
CHECKED	F. O REILLY
APPROVED	F. O REILLY

Peebles Transformers Limited. Edinburgh. Scotland

PROJECT:- MIRANT CORPORATION - APEX PROJECT, NEVADA

CIRCUIT DIAGRAM OF COOLER CONTROLS AND ANCILLARIES FOR A 215 MVA., 525/18 kV., OA/FA/FA COOLED, 3 PHASE, 60 Hz., GENERATOR TRANSFORMER.

DRAWING No.	SHEET	CONT	REV	SCALE	DDSC
621430_C00035_01	2	3			A1

russelgr 16.08.2001 11:39:48 7828_2

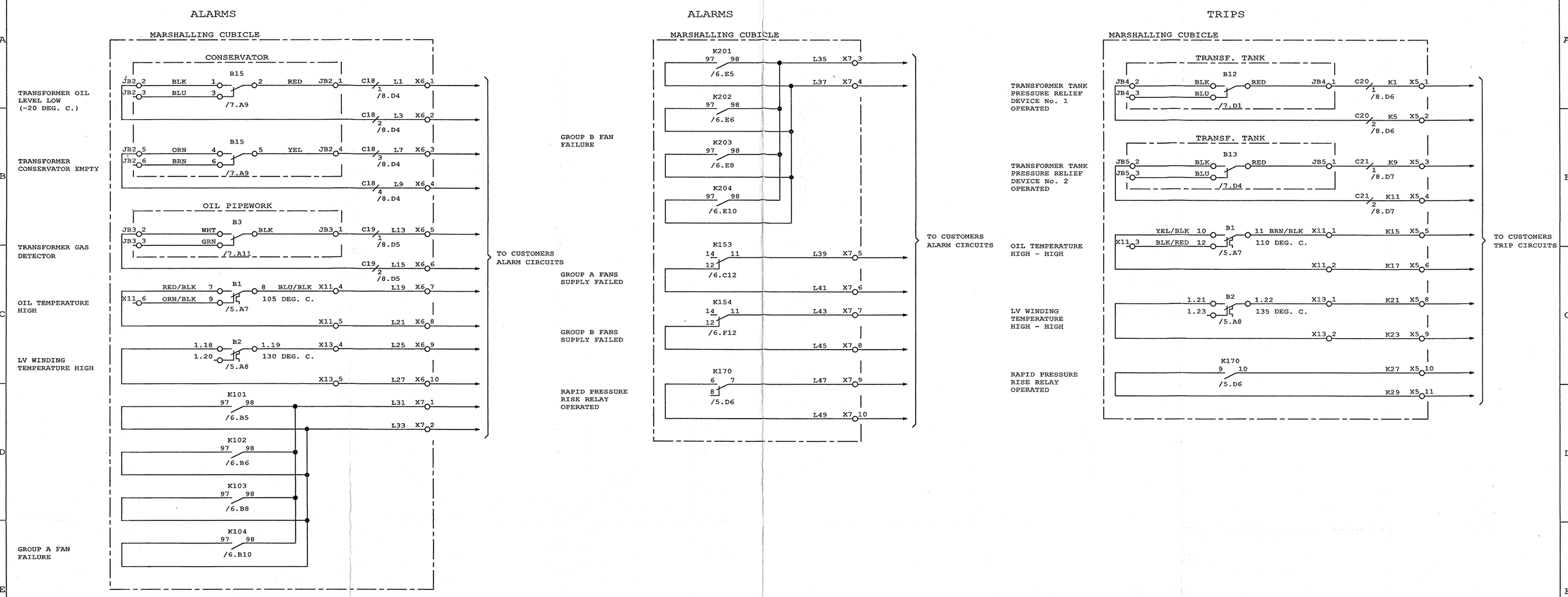

NOTES:-

1. ALL EQUIPMENT SHOWN IN THE OFF OR DE-ENERGISED CONDITION.
2. DRAWING SYMBOLS SHOWN ARE IN ACCORDANCE WITH ANSI/IEEE STD. 315A, (IEC SUPPLEMENT).
3. WHERE WORKING VOLTAGE EXCEEDS 125 VOLTS, ALL TERMINALS TO BE FULLY SHROUDED.
4. FOR DIAGRAM OF MARSH. CUBICLE COMPONENT MASTER SYMBOLS - SEE SHEETS 5 & 6.
5. FOR TRANSFORMER AUXILIARY COMPONENT MASTERS - SEE SHEET 7.
6. FOR MARSHALLING CUBICLE PARTS LIST - SEE SHEETS 10 & 11
7. FOR TRANSFORMER AUXILIARIES PARTS LIST - SEE SHEET 12.

R... CONTROLLED COPY

© COPYRIGHT 2001
PEEBLES TRANSFORMERS LIMITED

THIS DRAWING IS CONFIDENTIAL AND IS THE PROPERTY OF PEEBLES TRANSFORMERS LIMITED AND IS NOT TO BE COPIED OR IN ANY WAY MADE USE OF WITHOUT THE EXPRESS PERMISSION OF THE PROPRIETORS.

REV	SIG & DATE	REV	SIG & DATE	REV	SIG & DATE	REV	SIG & DATE	REV	SIG & DATE	REV	SIG & DATE	REV	SIG & DATE	REV	SIG & DATE	REV	SIG & DATE

REVISIONS	
DATE	15-08-2001
JOB No.	C00035_01
DRAWN	G. RUSSELL
CHECKED	F. O REILLY
APPROVED	F. O REILLY

MIRANT

Peebles Transformers Limited. Edinburgh. Scotland

PROJECT:- MIRANT CORPORATION - APEX PROJECT, NEVADA

CIRCUIT DIAGRAM OF ALARMS AND TRIPS
FOR A 215 MVA., 525/18 kV., OA/FA/FA COOLED, 3 PHASE,
60 Hz., GENERATOR TRANSFORMER.

DRAWING No.	SHEET	CONT	REV	SCALE	DDSC
621430_C00035_01	3	4			A1

russelgr 16.08.2001 11:39:48 7828_3

525kV. (HV) NEUTRAL PROTECTION CTs

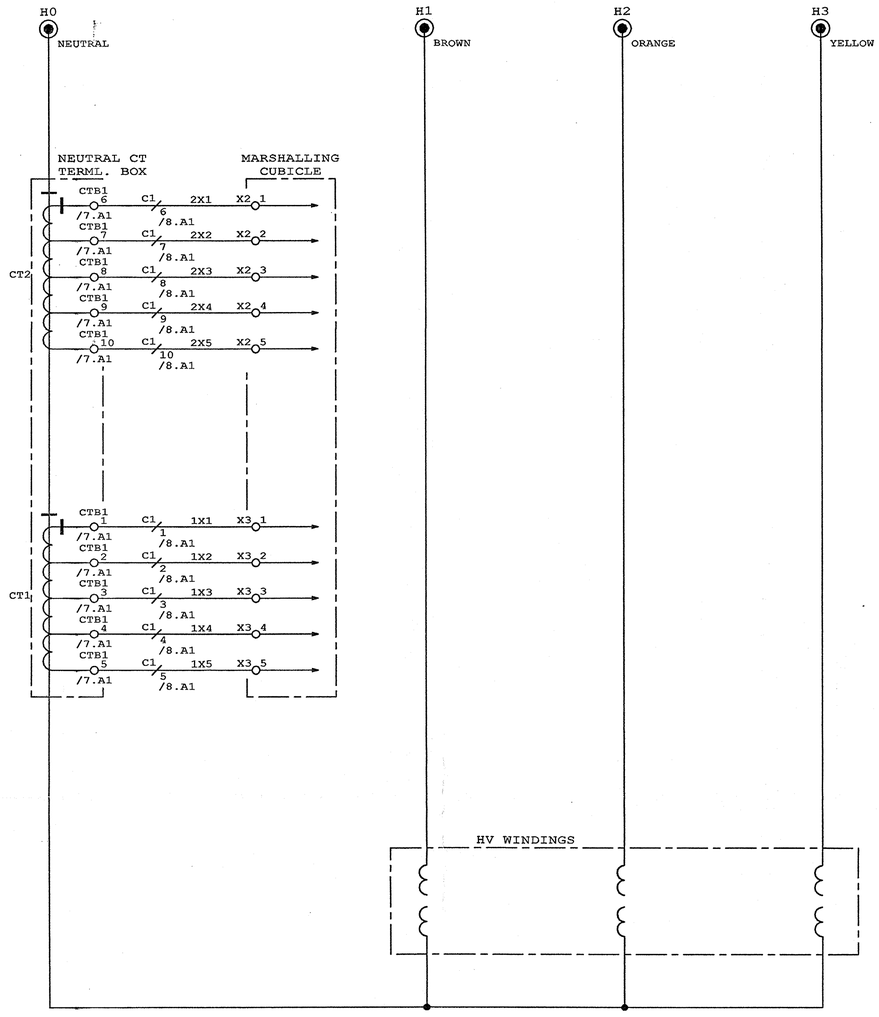

18kV. (LV) WINDING TEMP. IND. CT

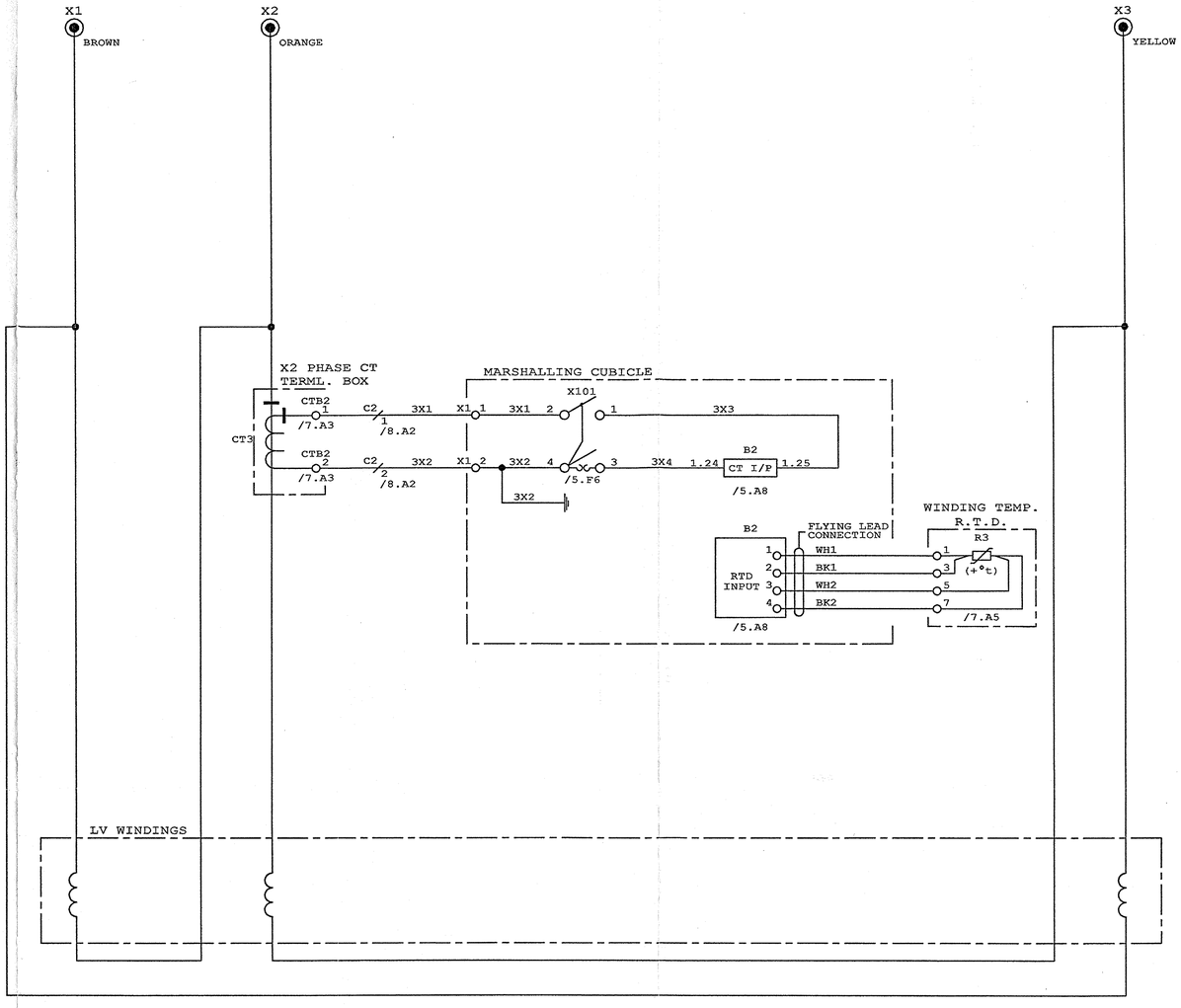

CT REF.	FUNCTION	RATIO	SEC. TAPS	CLASS	BURDEN	SERIAL Nos.
CT1-CT2	HV NEUTRAL PROTECTION	100:5	X2 - X3	C800		
		200:5	X1 - X2			
		300:5	X1 - X3			
		400:5	X4 - X5			
		500:5	X3 - X4			
		600:5	X2 - X4			
		800:5	X1 - X4			
		900:5	X3 - X5			
		1000:5	X2 - X5			
		1200:5	X1 - X5			

CT REF.	FUNCTION	RATIO	SEC. TAPS	CLASS	BURDEN	SERIAL No.
CT3	LV WINDING TEMP.	3980:5	X1 - X2	5	25 VA	

NOTES:-

1. DRAWING SYMBOLS SHOWN ARE IN ACCORDANCE WITH ANSI/IEEE STD. 315A, (IEC SUPPLEMENT).
2. FOR DIAGRAM OF MARSH. CUBICLE COMPONENT MASTER SYMBOLS - SEE SHEETS 5 & 6.
3. FOR TRANSFORMER AUXILIARY COMPONENT MASTERS - SEE SHEET 7.
4. FOR MARSHALLING CUBICLE PARTS LIST - SEE SHEETS 10 & 11.
5. FOR TRANSFORMER AUXILIARIES PARTS LIST - SEE SHEET 12.
6. DENOTES CT POLARITY

REVISION CONTROLLED COPY

MIRANT

© COPYRIGHT 2001
PEEBLES TRANSFORMERS LIMITED

THIS DRAWING IS CONFIDENTIAL AND IS THE PROPERTY OF PEEBLES TRANSFORMERS LIMITED AND IS NOT TO BE COPIED OR IN ANY WAY MADE USE OF WITHOUT THE EXPRESS PERMISSION OF THE PROPRIETORS.

REV	SIG & DATE	REV	SIG & DATE	REV	SIG & DATE	REV	SIG & DATE	REV	SIG & DATE	REV	SIG & DATE	REV	SIG & DATE	REV	SIG & DATE	REV	SIG & DATE

REVISIONS	
DATE	15-08-2001
JOB No.	C00035_01
DRAWN	G. RUSSELL
CHECKED	F. O REILLY
APPROVED	F. O REILLY

Peebles Transformers Limited. Edinburgh. Scotland

PROJECT:- MIRANT CORPORATION - APEX PROJECT, NEVADA

DIAGRAMMATIC ARRANGEMENT OF CURRENT TRANSFORMERS FOR A 215 MVA., 525/18 kV., OA/FA/FA COOLED, 3 PHASE, 60 Hz., GENERATOR TRANSFORMER.

DRAWING No.	SHEET	CONT	REV	SCALE	DDSC
621430_C00035_01	4	5			A1

russelgr 16.08.2001 11:39:48 7828_4

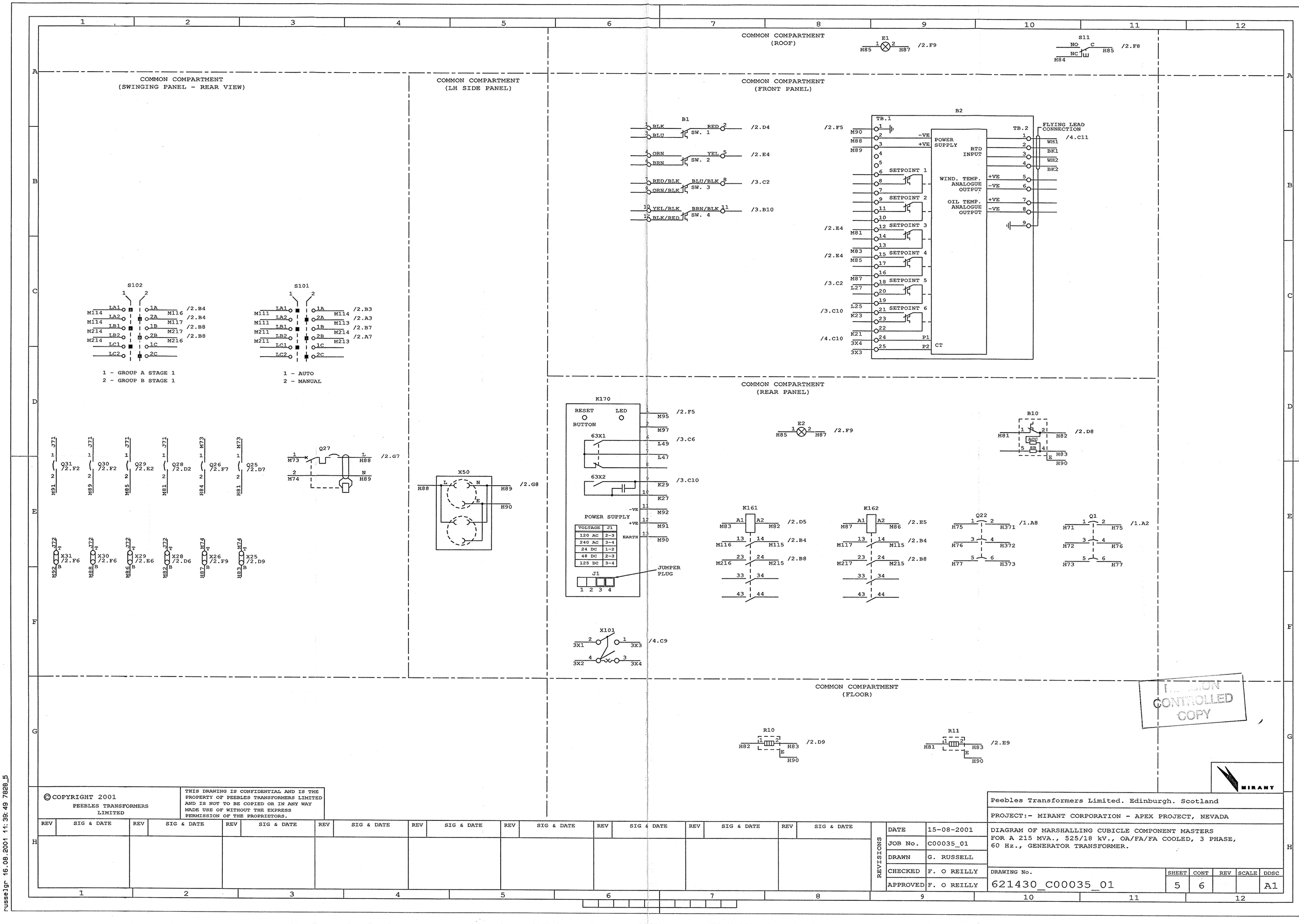

CONTROLLED COPY

© COPYRIGHT 2001
PEEBLES TRANSFORMERS LIMITED

THIS DRAWING IS CONFIDENTIAL AND IS THE PROPERTY OF PEEBLES TRANSFORMERS LIMITED AND IS NOT TO BE COPIED OR IN ANY WAY MADE USE OF WITHOUT THE EXPRESS PERMISSION OF THE PROPRIETORS.

REV	SIG & DATE	REV	SIG & DATE	REV	SIG & DATE	REV	SIG & DATE	REV	SIG & DATE	REV	SIG & DATE	REV	SIG & DATE	REV	SIG & DATE	REV	SIG & DATE

REVISIONS	
DATE	15-08-2001
JOB No.	C00035_01
DRAWN	G. RUSSELL
CHECKED	F. O REILLY
APPROVED	F. O REILLY

Peebles Transformers Limited. Edinburgh. Scotland

PROJECT:- MIRANT CORPORATION - APEX PROJECT, NEVADA

DIAGRAM OF MARSHALLING CUBICLE COMPONENT MASTERS FOR A 215 MVA., 525/18 kV., OA/FA/FA COOLED, 3 PHASE, 60 Hz., GENERATOR TRANSFORMER.

DRAWING No.	SHEET	CONT	REV	SCALE	DDSC
621430_C00035_01	5	6			A1

russelgr 16.08.2001 11:39:49 7828_5

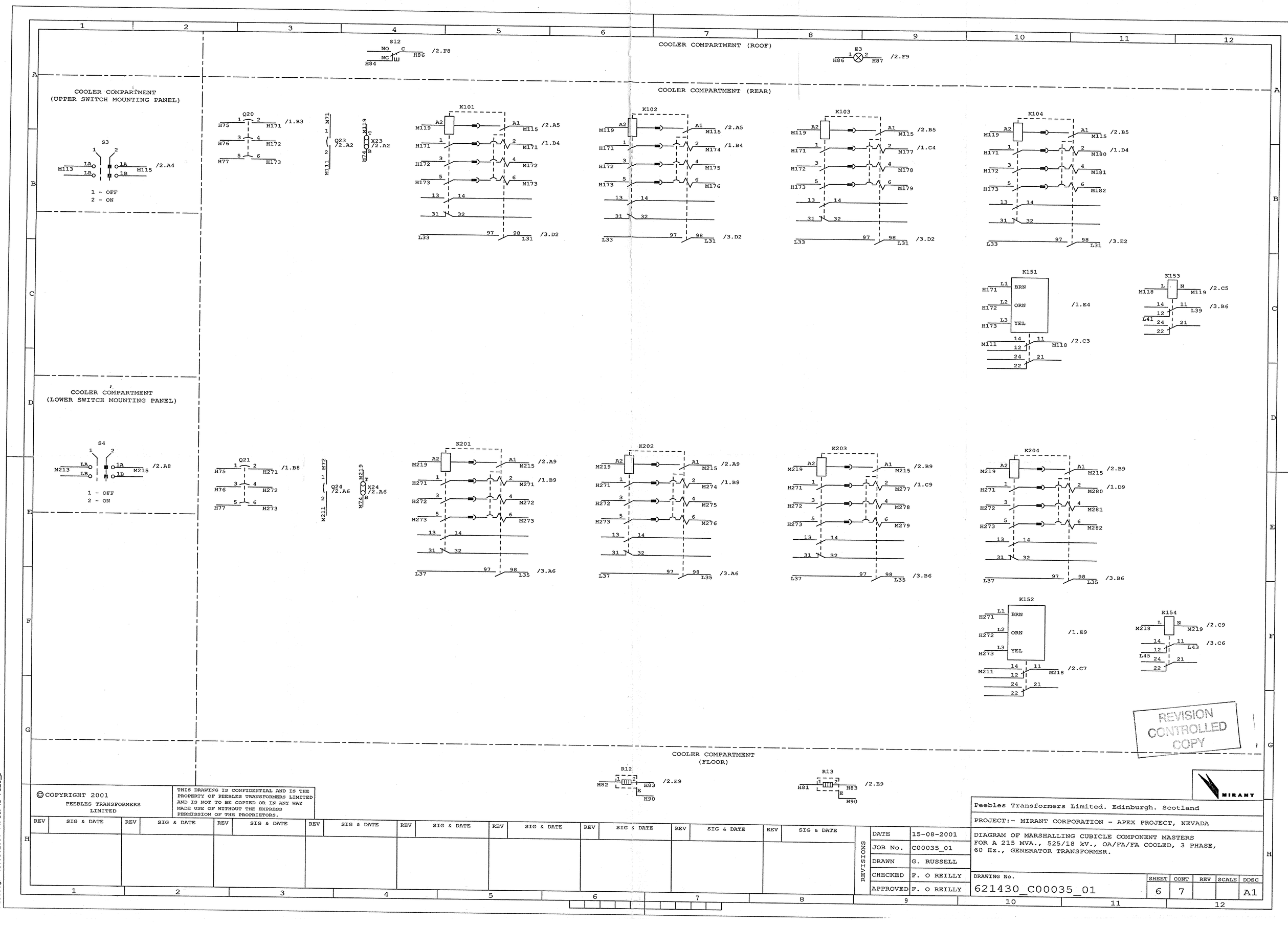

© COPYRIGHT 2001
PEEBLES TRANSFORMERS LIMITED

THIS DRAWING IS CONFIDENTIAL AND IS THE PROPERTY OF PEEBLES TRANSFORMERS LIMITED AND IS NOT TO BE COPIED OR IN ANY WAY MADE USE OF WITHOUT THE EXPRESS PERMISSION OF THE PROPRIETORS.

REV	SIG & DATE	REV	SIG & DATE	REV	SIG & DATE	REV	SIG & DATE	REV	SIG & DATE	REV	SIG & DATE	REV	SIG & DATE	REV	SIG & DATE	REV	SIG & DATE

REVISIONS

DATE	15-08-2001
JOB No.	C00035_01
DRAWN	G. RUSSELL
CHECKED	F. O REILLY
APPROVED	F. O REILLY

Peebles Transformers Limited. Edinburgh. Scotland

PROJECT:- MIRANT CORPORATION - APEX PROJECT, NEVADA

DIAGRAM OF MARSHALLING CUBICLE COMPONENT MASTERS FOR A 215 MVA., 525/18 kV., OA/FA/FA COOLED, 3 PHASE, 60 Hz., GENERATOR TRANSFORMER.

DRAWING No.	SHEET	CONT	REV	SCALE	DDSC
621430_C00035_01	6	7			A1

russeigr 16.08.2001 11:39:49 7828_6

H0 PHASE CT SECONDARY TERMINAL BOX

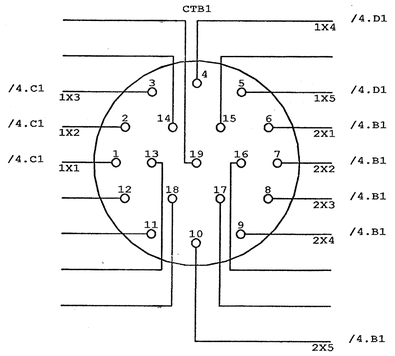

X2 PHASE CT SECONDARY TERMINAL BOX

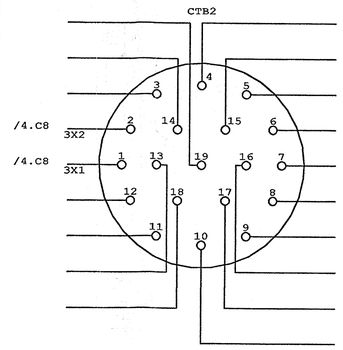

LV WIDING TEMP. INDICATOR RESISTANCE TEMP. DETECTOR

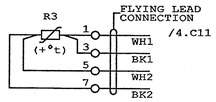

LOW OIL LEVEL RELAY

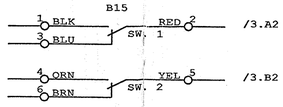

GAS DETECTOR RELAY

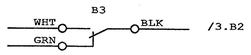

PRESSURE RELIEF DEVICE No. 1

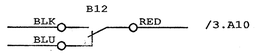

PRESSURE RELIEF DEVICE No. 2

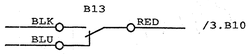

GROUP A FAN MOTORS

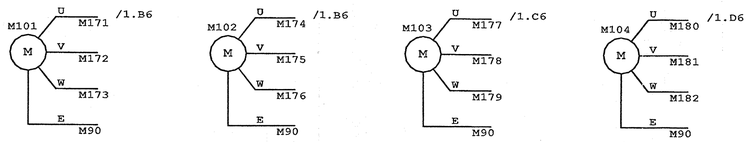

GROUP B FAN MOTORS

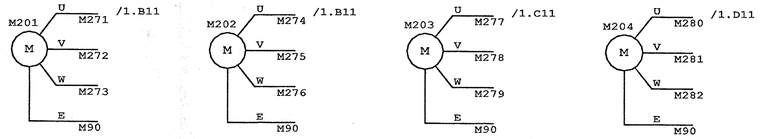

RAPID PRESSURE RISE RELAY

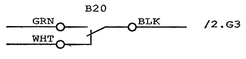

CONTROL CIRCUIT TRANSFORMER

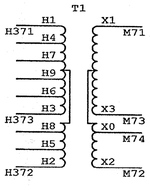

REVISION CONTROLLED COPY

© COPYRIGHT 2001
PEEBLES TRANSFORMERS LIMITED

THIS DRAWING IS CONFIDENTIAL AND IS THE PROPERTY OF PEEBLES TRANSFORMERS LIMITED AND IS NOT TO BE COPIED OR IN ANY WAY MADE USE OF WITHOUT THE EXPRESS PERMISSION OF THE PROPRIETORS.

REV	SIG & DATE	REV	SIG & DATE	REV	SIG & DATE	REV	SIG & DATE	REV	SIG & DATE	REV	SIG & DATE	REV	SIG & DATE	REV	SIG & DATE	REV	SIG & DATE

REVISIONS

DATE	15-08-2001
JOB No.	C00035_01
DRAWN	G. RUSSELL
CHECKED	F. O REILLY
APPROVED	F. O REILLY

MIRANT

Peebles Transformers Limited. Edinburgh. Scotland

PROJECT:- MIRANT CORPORATION - APEX PROJECT, NEVADA

DIAGRAM OF TRANSFORMER AUXILIARY COMPONENT MASTERS FOR A 215 MVA., 525/18 kV., OA/FA/FA COOLED, 3 PHASE, 60 Hz., GENERATOR TRANSFORMER.

DRAWING No.	SHEET	CONT	REV	SCALE	DDSC
621430_C00035_01	7	8			A1

russelgr 16.08.2001 11:39:49 7828_7

10 X 1 CORE	
CABLE No.C1	
CORE No.	LOCATION
1	/4.C2
2	/4.C2
3	/4.C2
4	/4.D2
5	/4.D2
6	/4.B2
7	/4.B2
8	/4.B2
9	/4.B2
10	/4.B2

2 X 1 CORE	
CABLE No.C2	
CORE No.	LOCATION
1	/4.C8
2	/4.C8

4 X 1 CORE	
CABLE No.C3	
CORE No.	LOCATION
1	/1.B5
2	/1.B5
3	/1.B5
4	/1.B5

4 X 1 CORE	
CABLE No.C4	
CORE No.	LOCATION
1	/1.B5
2	/1.C5
3	/1.C5
4	/1.C5

4 X 1 CORE	
CABLE No.C5	
CORE No.	LOCATION
1	/1.C5
2	/1.C5
3	/1.C5
4	/1.D5

4 X 1 CORE	
CABLE No.C6	
CORE No.	LOCATION
1	/1.D5
2	/1.D5
3	/1.D5
4	/1.D5

4 X 1 CORE	
CABLE No.C10	
CORE No.	LOCATION
1	/1.B11
2	/1.B11
3	/1.B11
4	/1.B11

4 X 1 CORE	
CABLE No.C11	
CORE No.	LOCATION
1	/1.B11
2	/1.C11
3	/1.C11
4	/1.C11

4 X 1 CORE	
CABLE No.C12	
CORE No.	LOCATION
1	/1.C11
2	/1.C11
3	/1.C11
4	/1.D11

4 X 1 CORE	
CABLE No.C13	
CORE No.	LOCATION
1	/1.D11
2	/1.D11
3	/1.D11
4	/1.D11

3 X 1 CORE	
CABLE No.C17	
CORE No.	LOCATION
1	/2.F4
2	/2.G4
3	/2.G4

4 X 1 CORE	
CABLE No.C18	
CORE No.	LOCATION
1	/3.A3
2	/3.A3
3	/3.B3
4	/3.B3

2 X 1 CORE	
CABLE No.C19	
CORE No.	LOCATION
1	/3.B3
2	/3.C3

2 X 1 CORE	
CABLE No.C20	
CORE No.	LOCATION
1	/3.A11
2	/3.A11

2 X 1 CORE	
CABLE No.C21	
CORE No.	LOCATION
1	/3.B11
2	/3.B11

7 x 1 CORE	
CABLE No.C22	
CORE No.	LOCATION
1	/1.A9
2	/1.A9
3	/1.A9
4	/1.A11
5	/1.A11
6	/1.A11
7	/1.A11

REVISION CONTROLLED COPY

MIRANT

© COPYRIGHT 2001
PEEBLES TRANSFORMERS LIMITED

THIS DRAWING IS CONFIDENTIAL AND IS THE PROPERTY OF PEEBLES TRANSFORMERS LIMITED AND IS NOT TO BE COPIED OR IN ANY WAY MADE USE OF WITHOUT THE EXPRESS PERMISSION OF THE PROPRIETORS.

REV	SIG & DATE	REV	SIG & DATE	REV	SIG & DATE	REV	SIG & DATE	REV	SIG & DATE	REV	SIG & DATE

REVISIONS

DATE	15-08-2001
JOB No.	C00035_01
DRAWN	G. RUSSELL
CHECKED	F. O REILLY
APPROVED	F. O REILLY

Peebles Transformers Limited. Edinburgh. Scotland

PROJECT:- MIRANT CORPORATION - APEX PROJECT, NEVADA

DIAGRAM OF TRANSFORMER EXTERNAL WIRING MASTERS FOR A 215 MVA., 525/18 kV., OA/FA/FA COOLED, 3 PHASE, 60 Hz., GENERATOR TRANSFORMER.

DRAWING No.	SHEET	CONT	REV	SCALE	DDSC
621430_C00035_01	8	9			A2

russelgr 16.08.2001 11:39:49 7828_8

CABLE MARKER	DESCRIPTION OF RUN FROM	DESCRIPTION OF RUN TO	EST. LENGTH (METERS)	SINGLE CORE 600/1000 VOLT, WIRING RUN IN CONDUIT — 12 A.W.G. 2 x 1 CORE	3 x 1 CORE	4 x 1 CORE	7 x 1 CORE	10 x 1 CORE	11 x 1 CORE	12 x 1 CORE	15 x 1 CORE	16 x 1 CORE	17 x 1 CORE	20 x 1 CORE	22 x 1 CORE	27 x 1 CORE	10 A.W.G. 2 x 1 CORE	10 x 1 CORE	6 A.W.G. 3 x 1 CORE	4 x 1 CORE	BS6121 GLANDS HAWKE TYPE FROM	TO	CORE TERMINATION REFERENCE	REMARKS	ROUTE INFORMATION
C1	MARSH CUBICLE	H0 CT TER BOX																x							
C2	MARSH CUBICLE	X2 CT TER BOX															x								
C3	MARSH CUBICLE	FAN No. M101				x																			
C4	MARSH CUBICLE	FAN No. M102				x																			
C5	MARSH CUBICLE	FAN No. M103				x																			
C6	MARSH CUBICLE	FAN No. M104				x																			
C10	MARSH CUBICLE	FAN No. M201				x																			
C11	MARSH CUBICLE	FAN No. M202				x																			
C12	MARSH CUBICLE	FAN No. M203				x																			
C13	MARSH CUBICLE	FAN No. M204				x																			
C17	MARSH CUBICLE	JUN BOX No. 1			x																		RAPID PR. RISE REL.		
C18	MARSH CUBICLE	JUN BOX No. 2				x																	LOW OIL LEVEL GAUGE		
C19	MARSH CUBICLE	JUN BOX No. 3		x																			GAS DETECTOR RELAY		
C20	MARSH CUBICLE	JUN BOX No. 4		x																			PRESSURE REL. DEV. 1		
C21	MARSH CUBICLE	JUN BOX No. 5		x																			PRESSURE REL. DEV. 2		
C22	MARSH CUBICLE	CCT TRANSFMR.					x																		

SEE NOTE 1

NOTE:-

1. 1 CORE TO BE COLOURED GREEN/YELLOW FOR GROUND CONNECTION.

REVISION CONTROLLED COPY

MIRANT

© COPYRIGHT 2001
PEEBLES TRANSFORMERS LIMITED

THIS DRAWING IS CONFIDENTIAL AND IS THE PROPERTY OF PEEBLES TRANSFORMERS LIMITED AND IS NOT TO BE COPIED OR IN ANY WAY MADE USE OF WITHOUT THE EXPRESS PERMISSION OF THE PROPRIETORS.

REV	SIG & DATE	REV	SIG & DATE	REV	SIG & DATE	REV	SIG & DATE	REV	SIG & DATE	REV	SIG & DATE

REVISIONS

DATE	15-08-2001
JOB No.	C00035_01
DRAWN	G. RUSSELL
CHECKED	F. O REILLY
APPROVED	F. O REILLY

Peebles Transformers Limited. Edinburgh. Scotland

PROJECT:- MIRANT CORPORATION - APEX PROJECT, NEVADA

EXTERNAL WIRING SCHEDULE
FOR A 215 MVA., 525/18 kV., OA/FA/FA COOLED, 3 PHASE, 60 Hz., GENERATOR TRANSFORMER.

DRAWING No.	SHEET	CONT	REV	SCALE	DDSC
621430_C00035_01	9	10			A2

russelgr 16.08.2001 11:39:49 7828_9

russelgr 16.08.2001 11:39:49 7828_10

REFERENCE	EQUIPMENT	DEVICE LOCATION 621430_C00035_03	CATALOGUE No.	ARTICLE No.
B1	OIL/WINDING TEMPERATURE INDICATOR OIL TEMPERATURE	/5.A7	QUALITROL INST. 104-12A1	
B2	ELECTRONIC TEMPERATURE MONITOR LV WINDING TEMP.	/5.A8	QUALITROL INST. 109-026-02	
B10	THERMOSTAT M. CUB. HEATERS	/5.D10	RS COMPONENTS CAT. NO. 375-0146	
E1	CUBICLE ILLUMINATION LAMP CUB. LIGHT No. 1	/5.A8	RS COMPONENTS CAT No. 196-5425	
E2	CUBICLE ILLUMINATION LAMP CUB. LIGHT No. 2	/5.D8	RS COMPONENTS CAT No. 196-5425	
E3	CUBICLE ILLUMINATION LAMP CUB. LIGHT No. 3	/6.A8	RS COMPONENTS CAT No. 196-5425	
K101	3 POLE CONTACTOR BREAKER FAN M101 STARTER	/6.A5	TELEMECANIQUE LD1-LB030FC	
K101	PROTECTION MODULE FAN M101 STARTER	/6.A5	TELEMECANIQUE LB1-LB03P07	
K101	3 POLE CONTACTOR BREAKER AUX. CONTACTS FAN M101 STARTER	/6.B5	TELEMECANIQUE LA1-LB017	
K102	3 POLE CONTACTOR BREAKER FAN M102 STARTER	/6.A6	TELEMECANIQUE LD1-LB030FC	
K102	PROTECTION MODULE FAN M102 STARTER	/6.A7	TELEMECANIQUE LB1-LB03P07	
K102	3 POLE CONTACTOR BREAKER AUX. CONTACTS FAN M102 STARTER	/6.B6	TELEMECANIQUE LA1-LB017	
K103	3 POLE CONTACTOR BREAKER FAN M103 STARTER	/6.A8	TELEMECANIQUE LD1-LB030FC	
K103	PROTECTION MODULE FAN M103 STARTER	/6.A8	TELEMECANIQUE LB1-LB03P07	
K103	3 POLE CONTACTOR BREAKER AUX. CONTACTS FAN M103 STARTER	/6.B8	TELEMECANIQUE LA1-LB017	
K104	3 POLE CONTACTOR BREAKER FAN M104 STARTER	/6.A10	TELEMECANIQUE LD1-LB030FC	
K104	PROTECTION MODULE FAN M104 STARTER	/6.A10	TELEMECANIQUE LB1-LB03P07	
K104	3 POLE CONTACTOR BREAKER AUX. CONTACTS FAN M104 STARTER	/6.B10	TELEMECANIQUE LA1-LB017	
K151	UNDERVOLTAGE RELAY 480V AC COOL A SUPP.	/6.C10	CROMPTON 252-PVK	
K152	UNDERVOLTAGE RELAY 480V AC COOL B SUPP.	/6.F10	CROMPTON 252-PVK	
K153	UNDERVOLTAGE RELAY 120V AC SUPP. FAIL A	/6.C12	CROMPTON 252-PVU	
K154	UNDERVOLTAGE RELAY 120V AC SUPP. FAIL B	/6.F12	CROMPTON 252-PVU	
K161	RELAY STAGE 1 TEMP. CONT.	/5.E7	TELEMECANIQUE CA3-DN40GD	
K162	RELAY STAGE 2 TEMP. CONT.	/5.E9	TELEMECANIQUE CA3-DN40GD	
K170	SEAL-IN RELAY RAPID PRESSURE RISE	/5.D6	QUALITROL INST. 909-200-01	
K201	3 POLE CONTACTOR BREAKER FAN M201 STARTER	/6.D5	TELEMECANIQUE LD1-LB030FC	
K201	PROTECTION MODULE FAN M201 STARTER	/6.D5	TELEMECANIQUE LB1-LB03P07	
K201	3 POLE CONTACTOR BREAKER AUX. CONTACTS FAN M201 STARTER	/6.E5	TELEMECANIQUE LA1-LB017	
K202	3 POLE CONTACTOR BREAKER FAN M202 STARTER	/6.D6	TELEMECANIQUE LD1-LB030FC	
K202	PROTECTION MODULE FAN M202 STARTER	/6.D7	TELEMECANIQUE LB1-LB03P07	
K202	3 POLE CONTACTOR BREAKER AUX. CONTACTS FAN M202 STARTER	/6.E6	TELEMECANIQUE LA1-LB017	
K203	3 POLE CONTACTOR BREAKER FAN M203 STARTER	/6.D8	TELEMECANIQUE LD1-LB030FC	
K203	PROTECTION MODULE FAN M203 STARTER	/6.D8	TELEMECANIQUE LB1-LB03P07	
K203	3 POLE CONTACTOR BREAKER AUX. CONTACTS FAN M203 STARTER	/6.E8	TELEMECANIQUE LA1-LB017	
K204	3 POLE CONTACTOR BREAKER FAN M204 STARTER	/6.D10	TELEMECANIQUE LD1-LB030FC	
K204	PROTECTION MODULE FAN M204 STARTER	/6.D10	TELEMECANIQUE LB1-LB03P07	
K204	3 POLE CONTACTOR BREAKER AUX. CONTACTS FAN M204 STARTER	/6.E10	TELEMECANIQUE LA1-LB017	
Q1	CIRCUIT BREAKER MAIN 480 VOLT SUPPLY	/5.E11	SQUARE D FAL 34060V	
Q20	CIRCUIT BREAKER COOLER GROUP A	/6.A3	SQUARE D FAL 34020V	
Q21	CIRCUIT BREAKER COOLER GROUP B	/6.E3	SQUARE D FAL 34020V	
Q22	CIRCUIT BREAKER COOL CONTROLS 120VAC	/5.E10	SQUARE D FAL 34020V	
Q23	CIRCUIT BREAKER 120V AC COOL A CONT	/6.A3	SQUARE D FAL 14015	
Q24	CIRCUIT BREAKER 120V AC COOL B CONT	/6.E3	SQUARE D FAL 14015	
Q25	CIRCUIT BREAKER 120V AC HEATERS	/5.E2	SQUARE D FAL 14015	
Q26	CIRCUIT BREAKER 120V AC LIGHTS	/5.E2	SQUARE D FAL 14015	
Q27	RES. CURRENT CIRCUIT BREAKER 120V AC CONV. OUTLET	/5.D3	SQUARE D QO120GFI (20A/6mA)	
Q28	CIRCUIT BREAKER ST1 TEMP CONT 125VDC	/5.E2	SQUARE D FAL 14015	
Q29	CIRCUIT BREAKER ST2 TEMP CONT 125VDC	/5.E1	SQUARE D FAL 14015	
Q30	CIRCUIT BREAKER 125V DC WT MONITOR	/5.E1	SQUARE D FAL 14015	
Q31	CIRCUIT BREAKER RAPID PR. RISE RELAY	/5.E1	SQUARE D FAL 14015	

© COPYRIGHT 2001
PEEBLES TRANSFORMERS LIMITED

THIS DRAWING IS CONFIDENTIAL AND IS THE PROPERTY OF PEEBLES TRANSFORMERS LIMITED AND IS NOT TO BE COPIED OR IN ANY WAY MADE USE OF WITHOUT THE EXPRESS PERMISSION OF THE PROPRIETORS.

REV	SIG & DATE

REVISIONS

DATE	15-08-2001
JOB No.	C00035_01
DRAWN	G. RUSSELL
CHECKED	F. O REILLY
APPROVED	F. O REILLY

Peebles Transformers Limited. Edinburgh. Scotland

PROJECT:- MIRANT CORPORATION - APEX PROJECT, NEVADA

MARSHALLING CUBICLE PARTS LIST
FOR A 215 MVA., 525/18 kV., OA/FA/FA COOLED, 3 PHASE,
60 Hz., GENERATOR TRANSFORMER.

DRAWING No. 621430_C00035_01

SHEET	CONT	REV	SCALE	DDSC
10	11		A2	

REVISION CONTROLLED COPY

MIRANT

REFERENCE	EQUIPMENT	DEVICE LOCATION 621430_C00035_03	CATALOGUE No.	ARTICLE No.
R10	ANTI-CONDENSATION HEATER No. 1	/5.G8	RS COMPONENTS CAT. NO. 605-611	
R11	ANTI-CONDENSATION HEATER No. 2	/5.G9	RS COMPONENTS CAT. NO. 605-611	
R12	ANTI-CONDENSATION HEATER No. 3	/6.G6	RS COMPONENTS CAT. NO. 605-611	
R13	ANTI-CONDENSATION HEATER No. 4	/6.G8	RS COMPONENTS CAT. NO. 605-611	
S3	CONTROL SWITCH GROUP A OFF/ON	/6.B1	CRAIG & DERRICOTT RD3211/1/NC LK KNOB	
S4	CONTROL SWITCH GROUP B OFF/ON	/6.E1	CRAIG & DERRICOTT RD3211/1/NC LK KNOB	
S11	DOOR SWITCH CUB. LIGHT No. 1	/5.A11	RS COMPONENTS CAT. NO. 301-2286	
S12	DOOR SWITCH CUB. LIGHT No. 2	/6.A4	RS COMPONENTS CAT. NO. 301-2286	
S101	CONTROL SWITCH AUTO/MANUAL	/5.C3	CRAIG & DERRICOTT RT3232/1/NC LK KNOB	
S102	CONTROL SWITCH GRP A ST1/GRP B ST1	/5.C1	CRAIG & DERRICOTT RT3232/1/NC LK KNOB	
X1	SHORTING TYPE TERMINAL	/4.C9	STATES NT-M-25106 (6 WAY)	
X2	SHORTING TYPE TERMINAL	/4.B2	STATES NT-M-25106 (6 WAY)	
X3	SHORTING TYPE TERMINAL	/4.C2	STATES NT-M-25106 (6 WAY)	
X4	TERMINAL BLOCK	/2.D2	STATES NT-25012-PL (12 WAY)	
X5	TERMINAL BLOCK	/3.A11	STATES NT-25012-PL (12 WAY)	
X6	TERMINAL BLOCK	/3.A4	STATES NT-25012-PL (12 WAY)	
X7	TERMINAL BLOCK	/3.D4	STATES NT-25012-PL (12 WAY)	
X8	TERMINAL BLOCK	/1.A2	WEIDMULLER (KLIPPON) SAKG2II	
X9	TERMINAL BLOCK	/1.B5	STATES NT-25012-PL (12 WAY)	
X10	TERMINAL BLOCK	/1.B10	STATES NT-25012-PL (12 WAY)	
X11	TERMINAL BLOCK	/3.B11	STATES NT-25012-PL (12 WAY)	
X12	TERMINAL BLOCK	/1.A9	STATES NT-25012-PL (12 WAY)	
X13	TERMINAL BLOCK	/3.C11	STATES NT-25012-PL (12 WAY)	
X23	LINK 120V AC COOL A CONT	/6.A4	GEC RS20H (WHITE)	
X24	LINK 120V AC COOL B CONT	/6.E4	GEC RS20H (WHITE)	
X25	LINK 120V AC HEATERS	/5.E2	GEC RS20P (WHITE)	
X26	LINK 120V AC LIGHTS	/5.E2	GEC RS20P (WHITE)	
X28	LINK ST1 TEMP CONT 125VDC	/5.E2	GEC RS20P (WHITE)	
X29	LINK ST2 TEMP CONT 125VDC	/5.E1	GEC RS20P (WHITE)	
X30	LINK 125V DC WT MONITOR	/5.E1	GEC RS20P (WHITE)	
X31	LINK RAPID PR. RISE RELAY	/5.E1	GEC RS20P (WHITE)	
X50	DUPLEX SOCKET OUTLET 120V. 20A.	/5.E4	HARVEY HUBBELL Cat. No. 5463 (ALUM. BOX)	
X101	SHORTING TYPE WTI TEST LINKS	/5.F6	STATES MTS-202-C-10	

REVISION CONTROLLED COPY

MIRANT

© COPYRIGHT 2001
PEEBLES TRANSFORMERS LIMITED

THIS DRAWING IS CONFIDENTIAL AND IS THE PROPERTY OF PEEBLES TRANSFORMERS LIMITED AND IS NOT TO BE COPIED OR IN ANY WAY MADE USE OF WITHOUT THE EXPRESS PERMISSION OF THE PROPRIETORS.

REV	SIG & DATE	REV	SIG & DATE	REV	SIG & DATE	REV	SIG & DATE	REV	SIG & DATE	REV	SIG & DATE

REVISIONS

DATE	15-08-2001
JOB No.	C00035_01
DRAWN	G. RUSSELL
CHECKED	F. O REILLY
APPROVED	F. O REILLY

Peebles Transformers Limited. Edinburgh. Scotland

PROJECT:- MIRANT CORPORATION - APEX PROJECT, NEVADA

MARSHALLING CUBICLE PARTS LIST
FOR A 215 MVA., 525/18 kV., OA/FA/FA COOLED, 3 PHASE, 60 Hz., GENERATOR TRANSFORMER.

DRAWING No.	SHEET	CONT	REV	SCALE	DDSC
621430_C00035_01	11	12			A2

russelgr 16.08.2001 11:39:49 7828_11

REFERENCE	EQUIPMENT	DEVICE LOCATION 621430_C00035_03	CATALOGUE No.	ARTICLE No.
B3	GAS DETECTOR RELAY	/7.A11	QUALITROL INST. 038-007-01	
B12	PRESSURE RELIEF DEVICE SWITCH (ANSI) No. 1	/7.D1	QUALITROL INST. SWT-648-1/CON-659-9(84")	
B13	PRESSURE RELIEF DEVICE SWITCH (ANSI) No. 2	/7.D4	QUALITROL INST. SWT-648-1/CON-659-9(84")	
B15	OIL LEVEL INDICATOR	/7.A9	QUALITROL INST. 042-099	
B20	RAPID PRESSURE RISE RELAY	/7.F1	QUALITROL INST. 900-010	
CTB1	TERMINAL BLOCK H0 PHASE CTS	/7.A1	FERRANTI PACKARD 19 WAY	
CTB2	TERMINAL BLOCK X2 PHASE CTS	/7.A3	FERRANTI PACKARD 19 WAY	
JB1	TERMINAL BLOCK RAPID PR. RISE RELAY		STATES NT-25006-PL (6 WAY)	
JB2	TERMINAL BLOCK OIL LEVEL GAUGE		STATES NT-25006-PL (6 WAY)	
JB3	TERMINAL BLOCK GAS DETECTOR		STATES NT-25006-PL (6 WAY)	
JB4	TERMINAL BLOCK PRESSURE RELIEF No.1		STATES NT-25006-PL (6 WAY)	
JB5	TERMINAL BLOCK PRESSURE RELIEF No.2		STATES NT-25006-PL (6 WAY)	
M101	FAN MOTOR M101	/7.C5	SCHORMANN SH 1000-8	
M102	FAN MOTOR M102	/7.C6	SCHORMANN SH 1000-8	
M103	FAN MOTOR M103	/7.C7	SCHORMANN SH 1000-8	
M104	FAN MOTOR M104	/7.C8	SCHORMANN SH 1000-8	
M201	FAN MOTOR M201	/7.C9	SCHORMANN SH 1000-8	
M202	FAN MOTOR M202	/7.C10	SCHORMANN SH 1000-8	
M203	FAN MOTOR M203	/7.C11	SCHORMANN SH 1000-8	
M204	FAN MOTOR M204	/7.C12	SCHORMANN SH 1000-8	
R3	RESISTANCE TEMPERATURE DETECTOR LV WINDING TEMP.	/7.A5	QUALITROL INST. 103-015-01-CS31697-2	
T1	AUXILIARY SUPPLY TRANSF. 480/120VAC	/7.F3	SQUARE D 3T2F	

REVISION CONTROLLED COPY

© COPYRIGHT 2001
PEEBLES TRANSFORMERS LIMITED

THIS DRAWING IS CONFIDENTIAL AND IS THE PROPERTY OF PEEBLES TRANSFORMERS LIMITED AND IS NOT TO BE COPIED OR IN ANY WAY MADE USE OF WITHOUT THE EXPRESS PERMISSION OF THE PROPRIETORS.

REV	SIG & DATE

REVISIONS

DATE	15-08-2001
JOB No.	C00035_01
DRAWN	G. RUSSELL
CHECKED	F. O REILLY
APPROVED	F. O REILLY

Peebles Transformers Limited. Edinburgh. Scotland

PROJECT:- MIRANT CORPORATION - APEX PROJECT, NEVADA

TRANSFORMER AUXILIARIES PARTS LIST
FOR A 215 MVA., 525/18 kV., OA/FA/FA COOLED, 3 PHASE,
60 Hz., GENERATOR TRANSFORMER.

MIRANT

DRAWING No.	SHEET	CONT	REV	SCALE	DDSC
621430_C00035_01	12	13			A2

COMMON COMPARTMENT
(LH SIDE PANEL)

X11
+MARSH CUBICLE
=MC

	1	BRN/BLK	OIL TEMPERATURE INDICATOR
X5 5	1	N15	
	2	YEL/BLK	
X5 6	2	N17	
	3	BLK/RED	
	4	BLU/BLK	
X6 7	4	L19	
	5	RED/BLK	
X6 8	5	L21	
	6	ORN/BLK	
JB2 2	7	BLK	
X4 3	7	M81	
JB2 1	8	RED	
X4 4	8	M83	
B15 3	9	BLU	
B15 4	10	ORN	
X4 6	10	M85	
B15 5	11	YEL	
X4 7	11	M87	
B15 6	12	BRN	

X12
+MARSH CUBICLE
=MC

C22 1	1	H371	480V CCT PRIMARY
Q22 2	1	H371	
C22 2	2	H372	
Q22 4	2	H372	
C22 3	3	H373	
Q22 6	3	H373	
	4		
	5		
C22 4	6	M71	208/120V CCT SECONDARY
Q23 1	6	M71	
C22 5	7	M72	
Q24 1	7	M72	
C22 6	8	M73	
Q25 1	8	M73	
C22 7	9	M74	
Q27 2	9	M74	
	10		
	11		
	12		

COMMON COMPARTMENT
(REAR PANEL)

X1
+MARSH CUBICLE
=MC

C2 1	1	3X1	LV WTH CT
X101 2	1	3X1	
C2 2	2	3X2	
X101 4	2	3X2	
	3		
	4		
	5		
	6		

X2
+MARSH CUBICLE
=MC

C1 6	1	2X1	HV PH CT 2
C1 7	2	2X2	
C1 8	3	2X3	
C1 9	4	2X4	
C1 10	5	2X5	
	6		

X3
+MARSH CUBICLE
=MC

C1 1	1	1X1	HV PH CT 1
C1 2	2	1X2	
C1 3	3	1X3	
C1 4	4	1X4	
C1 5	5	1X5	
	6		

DENOTES EXTERNAL WIRE RUN/CORE No.
DENOTES INTERNAL WIRE DEST./PIN No.
DENOTES TERMINAL No.
DENOTES WIRE No.

X4
+MARSH CUBICLE
=MC

Q28 1	1	J71	RAPID PRESSURE RISE/TEMP. CONTROLS
X31 T	2	J72	
Q28 2	3	M81	
X11 7	3	M81	
X13 7	3	M81	
K161 A1	4	M83	
X11 8	4	M83	
X13 8	4	M83	
	5		
Q29 2	6	M85	
X11 10	6	M85	
X13 10	6	M85	
K162 A1	7	M87	
X11 11	7	M87	
X13 11	7	M87	
	8		
C17 1	9	M91	
K170 12	9	M91	
C17 2	10	M95	
K170 1	10	M95	
C17 3	11	M97	
K170 2	11	M97	
	12		

X5
+MARSH CUBICLE
=MC

C20 1	1	K1	TRIPS
C20 2	2	K5	
C21 1	3	K9	
C21 2	4	K11	
X11 1	5	K15	
X11 2	6	K17	
	7		
X13 1	8	K21	
X13 2	9	K23	
K170 10	10	K27	
K170 9	11	K29	
	12		

X6
+MARSH CUBICLE
=MC

C18 1	1	L1	ALARMS
C18 2	2	L3	
C18 3	3	L7	
C18 4	4	L9	
C19 1	5	L13	
C19 2	6	L15	
X11 4	7	L19	
X11 5	8	L21	
X13 4	9	L25	
X13 5	10	L27	
	11		
	12		

X7
+MARSH CUBICLE
=MC

K101 98	1	L31	ALARMS
K101 97	2	L33	
K201 98	3	L35	
K201 97	4	L37	
K153 11	5	L39	
K153 12	6	L41	
K154 11	7	L43	
K154 12	8	L45	
K170 7	9	L47	
K170 6	10	L49	
	11		
	12		

COMMON COMPARTMENT
(RH SIDE PANEL)

X13
+MARSH CUBICLE
=MC

B2 1.22	1	K21	WINDING TEMPERATURE INDICATOR
X5 8	1	K21	
B2 1.21	2	K23	
X5 9	2	K23	
	3		
B2 1.19	4	L25	
X6 9	4	L25	
B2 1.18	5	L27	
X6 10	5	L27	
	6		
B2 1.12	7	M81	
X4 3	7	M81	
B2 1.13	8	M83	
X4 4	8	M83	
	9		
B2 1.15	10	M85	
X4 6	10	M85	
B2 1.16	11	M87	
X4 7	11	M87	
	12		

X8
+MARSH CUBICLE
=MC

Q1 1	1	H71	480V SUPPLY
Q1 3	2	H72	
Q1 5	3	H73	

COOLER COMPARTMENT
(R.H. SIDE PANEL)

X9
+MARSH CUBICLE
=MC

C3 1	1	M171	FAN M101
K101 2	1	M171	
C3 2	2	M172	
K101 4	2	M172	
C3 3	3	M173	
K101 6	3	M173	
C4 1	4	M174	FAN M102
K102 2	4	M174	
C4 2	5	M175	
K102 4	5	M175	
C4 3	6	M176	
K102 6	6	M176	
C5 1	7	M177	FAN M103
K103 2	7	M177	
C5 2	8	M178	
K103 4	8	M178	
C5 3	9	M179	
K103 6	9	M179	
C6 1	10	M180	FAN M104
K104 2	10	M180	
C6 2	11	M181	
K104 4	11	M181	
C6 3	12	M182	
K104 6	12	M182	

X10
+MARSH CUBICLE
=MC

C10 1	1	M271	FAN M201
K201 2	1	M271	
C10 2	2	M272	
K201 4	2	M272	
C10 3	3	M273	
K201 6	3	M273	
C11 1	4	M274	FAN M202
K202 2	4	M274	
C11 2	5	M275	
K202 4	5	M275	
C11 3	6	M276	
K202 6	6	M276	
C12 1	7	M277	FAN M203
K203 2	7	M277	
C12 2	8	M278	
K203 4	8	M278	
C12 3	9	M279	
K203 6	9	M279	
C13 1	10	M280	FAN M204
K204 2	10	M280	
C13 2	11	M281	
K204 4	11	M281	
C13 3	12	M282	
K204 6	12	M282	

NOTES:-

1. ONLY PEEBLES WIRING CONNECTIONS SHOWN.
2. ONE SIDE OF TERMINAL FOR PEEBLES CONNECTIONS OTHER SIDE TO BE LEFT CLEAR FOR CUSTOMERS CONNECTIONS.

REVISION CONTROLLED COPY

MIRANT

© COPYRIGHT 2001
PEEBLES TRANSFORMERS LIMITED

THIS DRAWING IS CONFIDENTIAL AND IS THE PROPERTY OF PEEBLES TRANSFORMERS LIMITED AND IS NOT TO BE COPIED OR IN ANY WAY MADE USE OF WITHOUT THE EXPRESS PERMISSION OF THE PROPRIETORS.

REV	SIG & DATE	REV	SIG & DATE	REV	SIG & DATE	REV	SIG & DATE	REV	SIG & DATE	REV	SIG & DATE	REV	SIG & DATE	REV	SIG & DATE	REV	SIG & DATE

REVISIONS

DATE	15-08-2001
JOB No.	C00035_01
DRAWN	G. RUSSELL
CHECKED	F. O REILLY
APPROVED	F. O REILLY

Peebles Transformers Limited. Edinburgh. Scotland

PROJECT:- MIRANT CORPORATION - APEX PROJECT, NEVADA

TERMINAL LAYOUT FOR MARSHALLING CUBICLE
FOR A 215 MVA., 525/18 kV., OA/FA/FA COOLED, 3 PHASE,
60 Hz., GENERATOR TRANSFORMER.

DRAWING No.	SHEET	CONT	REV	SCALE	DDSC
621430_C00035_01	13	14			A1

russelgr 16.08.2001 11:39:49 7828_13

russelgr 16.08.2001 11:39:50 7828_14

TRANSFORMER TANK (RAPID PRESS. RISE RELAY)

JB1
+JUN BOX No. 1
=TX

B20 GRN	1	GREEN
C17 1	1	M91
B20 BLK	2	BLACK
C17 2	2	M95
B20 WHT	3	WHITE
C17 3	3	M97
	4	
	5	
	6	

TRANSFORMER CONSERVATOR (TRANSMR. LOW OIL LEVEL)

JB2
+JUN BOX No. 2
=TX

B15 2	1	RED
C18 1	1	L1
B15 1	2	BLK
C18 2	2	L3
B15 3	3	BLU
B15 5	4	YEL
C18 3	4	L7
B15 4	5	ORN
C18 4	5	L9
B15 6	6	BRN

TRANSFORMER TANK (TRANSFMR. GAS DET. RELAY)

JB3
+JUN BOX No. 3
=TX

B3 BLK	1	BLACK
C19 1	1	L13
B3 WHT	2	WHITE
C19 2	2	L15
B3 GRN	3	GREEN
	4	
	5	
	6	

TRANSFORMER TANK (TRANSFMR. PRESS RELIEF #1)

JB4
+JUN BOX No. 4
=TX

B12 RED	1	RED
C20 1	1	K1
B12 BLK	2	BLACK
C20 2	2	K5
B12 BLU	3	BLUE
	4	
	5	
	6	

TRANSFORMER TANK (TRANSFMR. PRESS RELIEF #2)

JB5
+JUN BOX No. 5
=TX

B13 RED	1	RED
C21 1	1	K9
B13 BLK	2	BLACK
C21 2	2	K11
B13 BLU	3	BLUE
	4	
	5	
	6	

REVISION CONTROLLED COPY

MIRANT

© COPYRIGHT 2001
PEEBLES TRANSFORMERS LIMITED

THIS DRAWING IS CONFIDENTIAL AND IS THE PROPERTY OF PEEBLES TRANSFORMERS LIMITED AND IS NOT TO BE COPIED OR IN ANY WAY MADE USE OF WITHOUT THE EXPRESS PERMISSION OF THE PROPRIETORS.

REV	SIG & DATE	REV	SIG & DATE	REV	SIG & DATE	REV	SIG & DATE

REVISIONS

DATE	15-08-2001
JOB No.	C00035_01
DRAWN	G. RUSSELL
CHECKED	F. O REILLY
APPROVED	F. O REILLY

Peebles Transformers Limited. Edinburgh. Scotland

PROJECT:- MIRANT CORPORATION - APEX PROJECT, NEVADA

TERMINAL LAYOUT FOR TRANSFORMER AUXILIARIES FOR A 215 MVA., 525/18 kV., OA/FA/FA COOLED, 3 PHASE, 60 Hz., GENERATOR TRANSFORMER.

DRAWING No.	SHEET	CONT	REV	SCALE	DDSC
621430_C00035_01	14	15			A3

REF	REV	CABLE	CORE	SEGREGATION GROUP	WIRE COLOUR	WIRE SIZE sq.mm	WIRE No.	ASSIGN	LOC	DEVICE REFERENCE	TERMINAL No.	ASSIGN	LOC	DEVICE REFERENCE	TERMINAL No.	SPARE
1				CONTROL	ORANGE	6.0mm	3X1	MC		X101	2	MC		X1	1	
2				CONTROL	ORANGE	6.0mm	3X2	MC		EC7	E	MC		X101	4	
3				CONTROL	ORANGE	6.0mm	3X2	MC		X101	4	MC		X1	2	
4				CONTROL	ORANGE	6.0mm	3X3	MC		X101	1	MC		B2	1.25	
5				CONTROL	ORANGE	6.0mm	3X4	MC		X101	3	MC		B2	1.24	
6				POWER	BROWN	6.0mm	H71	MC		X8	1	MC		Q1	1	
7				POWER	ORANGE	6.0mm	H72	MC		X8	2	MC		Q1	3	
8				POWER	YELLOW	6.0mm	H73	MC		X8	3	MC		Q1	5	
9				POWER	BROWN	6.0mm	H75	MC		Q20	1	MC		Q21	1	
10				POWER	BROWN	6.0mm	H75	MC		Q21	1	MC		Q22	1	
11				POWER	BROWN	6.0mm	H75	MC		Q22	1	MC		Q1	2	
12				POWER	ORANGE	6.0mm	H76	MC		Q20	3	MC		Q21	3	
13				POWER	ORANGE	6.0mm	H76	MC		Q21	3	MC		Q22	3	
14				POWER	ORANGE	6.0mm	H76	MC		Q22	3	MC		Q1	4	
15				POWER	YELLOW	6.0mm	H77	MC		Q20	5	MC		Q21	5	
16				POWER	YELLOW	6.0mm	H77	MC		Q21	5	MC		Q22	5	
17				POWER	YELLOW	6.0mm	H77	MC		Q22	5	MC		Q1	6	
18				CONTROL	YELLOW	4.0mm	H81	MC		B10	1	MC		Q25	2	
19				CONTROL	YELLOW	4.0mm	H81	MC		Q25	2	MC		R11	1	
20				CONTROL	YELLOW	4.0mm	H81	MC		R11	1	MC		R13	1	
21				CONTROL	YELLOW	4.0mm	H82	MC		B10	2	MC		R10	1	
22				CONTROL	YELLOW	4.0mm	H82	MC		R10	1	MC		R12	1	
23				CONTROL	BLACK	4.0mm	H83	MC		B10	4	MC		R10	2	
24				CONTROL	BLACK	4.0mm	H83	MC		R10	2	MC		X25	B	
25				CONTROL	BLACK	4.0mm	H83	MC		X25	B	MC		R11	2	
26				CONTROL	BLACK	4.0mm	H83	MC		R11	2	MC		R12	2	
27				CONTROL	BLACK	4.0mm	H83	MC		R12	2	MC		R13	2	
28				CONTROL	YELLOW	4.0mm	H84	MC		S11	NC	MC		Q26	2	
29				CONTROL	YELLOW	4.0mm	H84	MC		Q26	2	MC		S12	NC	
30				CONTROL	YELLOW	4.0mm	H85	MC		E2	1	MC		S11	C	
31				CONTROL	YELLOW	4.0mm	H85	MC		S11	C	MC		E1	1	
32				CONTROL	YELLOW	4.0mm	H86	MC		S12	C	MC		E3	1	
33				CONTROL	BLACK	4.0mm	H87	MC		E1	2	MC		X26	B	
34				CONTROL	BLACK	4.0mm	H87	MC		X26	B	MC		E2	2	
35				CONTROL	BLACK	4.0mm	H87	MC		E2	2	MC		E3	2	
36				CONTROL	YELLOW	4.0mm	H88	MC		X50	L	MC		Q27	L	
37				CONTROL	BLACK	4.0mm	H89	MC		X50	N	MC		Q27	N	
38				CONTROL	G/Y	4.0mm	H90	MC		EC5	E	MC		R13	E	
39				CONTROL	G/Y	4.0mm	H90	MC		X50	E	MC		EC8	E	
40				CONTROL	G/Y	4.0mm	H90	MC		EC1	E	MC		B10	E	
41				CONTROL	G/Y	4.0mm	H90	MC		EC2	E	MC		R10	E	
42				CONTROL	G/Y	4.0mm	H90	MC		EC3	E	MC		R12	E	
43				CONTROL	G/Y	4.0mm	H90	MC		EC4	E	MC		R11	E	
44				POWER	BROWN	4.0mm	H171	MC		K101	1	MC		Q20	2	
45				POWER	BROWN	4.0mm	H171	MC		Q20	2	MC		X102	1	
46				POWER	BROWN	4.0mm	H171	MC		K102	1	MC		X103	1	
47				POWER	BROWN	4.0mm	H171	MC		K103	1	MC		X104	1	
48				POWER	BROWN	4.0mm	H171	MC		K104	1	MC		X151	L1	
49				POWER	ORANGE	4.0mm	H172	MC		K101	3	MC		Q20	4	
50				POWER	ORANGE	4.0mm	H172	MC		Q20	4	MC		X102	3	
51				POWER	ORANGE	4.0mm	H172	MC		K102	3	MC		X103	3	
52				POWER	ORANGE	4.0mm	H172	MC		K103	3	MC		X104	3	
53				POWER	ORANGE	4.0mm	H172	MC		K104	3	MC		X151	L2	
54				POWER	YELLOW	4.0mm	H173	MC		K101	5	MC		Q20	6	
55				POWER	YELLOW	4.0mm	H173	MC		Q20	6	MC		X102	5	
56				POWER	YELLOW	4.0mm	H173	MC		K102	5	MC		X103	5	
57				POWER	YELLOW	4.0mm	H173	MC		K103	5	MC		X104	5	
58				POWER	YELLOW	4.0mm	H173	MC		K104	5	MC		X151	L3	
59				POWER	BROWN	4.0mm	H271	MC		K152	L1	MC		X201	1	
60				POWER	BROWN	4.0mm	H271	MC		X201	1	MC		Q21	2	
61				POWER	BROWN	4.0mm	H271	MC		Q21	2	MC		X202	1	
62				POWER	BROWN	4.0mm	H271	MC		X202	1	MC		X203	1	
63				POWER	BROWN	4.0mm	H271	MC		X203	1	MC		X204	1	
64				POWER	ORANGE	4.0mm	H272	MC		K152	L2	MC		X201	3	
65				POWER	ORANGE	4.0mm	H272	MC		X201	3	MC		Q21	4	
66				POWER	ORANGE	4.0mm	H272	MC		Q21	4	MC		X202	3	
67				POWER	ORANGE	4.0mm	H272	MC		X202	3	MC		X203	3	
68				POWER	ORANGE	4.0mm	H272	MC		X203	3	MC		X204	3	
69				POWER	YELLOW	4.0mm	H273	MC		K152	L3	MC		X201	5	
70				POWER	YELLOW	4.0mm	H273	MC		X201	5	MC		Q21	6	
71				POWER	YELLOW	4.0mm	H273	MC		Q21	6	MC		X202	5	
72				POWER	YELLOW	4.0mm	H273	MC		X202	5	MC		X203	5	
73				POWER	YELLOW	4.0mm	H273	MC		X203	5	MC		X204	5	
74				POWER	BROWN	4.0mm	H371	MC		Q22	2	MC		X12	1	
75				POWER	ORANGE	4.0mm	H372	MC		Q22	4	MC		X12	2	

REF	REV	CABLE	CORE	SEGREGATION GROUP	WIRE COLOUR	WIRE SIZE sq.mm	WIRE No.	ASSIGN	LOC	DEVICE REFERENCE	TERMINAL No.	ASSIGN	LOC	DEVICE REFERENCE	TERMINAL No.	SPARE
76				POWER	YELLOW	4.0mm	H373	MC		Q22	6	MC		X12	3	
77				CONTROL	GREY	4.0mm	J71	MC		Q29	1	MC		Q30	1	
78				CONTROL	GREY	4.0mm	J71	MC		Q30	1	MC		Q31	1	
79				CONTROL	GREY	4.0mm	J71	MC		Q31	1	MC		X4	1	
80				CONTROL	GREY	4.0mm	J71	MC		X4	1	MC		Q28	1	
81				CONTROL	GREY	4.0mm	J72	MC		X28	T	MC		X29	T	
82				CONTROL	GREY	4.0mm	J72	MC		X29	T	MC		X30	T	
83				CONTROL	GREY	4.0mm	J72	MC		X30	T	MC		X4	2	
84				CONTROL	GREY	4.0mm	J72	MC		X4	2	MC		X31	T	
85				CONTROL	GREY	4.0mm	K15	MC		X5	5	MC		X11	1	
86				CONTROL	GREY	4.0mm	K17	MC		X5	6	MC		X11	2	
87				CONTROL	GREY	4.0mm	K21	MC		X13	1	MC		B2	1.22	
88				CONTROL	GREY	4.0mm	K21	MC		X5	8	MC		X13	1	
89				CONTROL	GREY	4.0mm	K23	MC		X13	2	MC		B2	1.21	
90				CONTROL	GREY	4.0mm	K23	MC		X5	9	MC		X13	2	
91				CONTROL	GREY	4.0mm	K27	MC		X5	10	MC		K170	10	
92				CONTROL	GREY	4.0mm	K29	MC		X5	11	MC		K170	9	
93				CONTROL	GREY	4.0mm	L19	MC		X6	7	MC		X11	4	
94				CONTROL	GREY	4.0mm	L21	MC		X6	8	MC		X11	5	
95				CONTROL	GREY	4.0mm	L25	MC		X13	4	MC		B2	1.19	
96				CONTROL	GREY	4.0mm	L25	MC		X6	9	MC		X13	4	
97				CONTROL	GREY	4.0mm	L27	MC		X13	5	MC		B2	1.18	
98				CONTROL	GREY	4.0mm	L27	MC		X6	10	MC		X13	5	
99				CONTROL	GREY	4.0mm	L31	MC		K101	98	MC		X7	1	
100				CONTROL	GREY	4.0mm	L31	MC		X7	1	MC		K102	98	
101				CONTROL	GREY	4.0mm	L31	MC		K102	98	MC		K103	98	
102				CONTROL	GREY	4.0mm	L31	MC		K103	98	MC		K104	98	
103				CONTROL	GREY	4.0mm	L33	MC		K101	97	MC		X7	2	
104				CONTROL	GREY	4.0mm	L33	MC		X7	2	MC		K102	97	
105				CONTROL	GREY	4.0mm	L33	MC		K102	97	MC		K103	97	
106				CONTROL	GREY	4.0mm	L33	MC		K103	97	MC		K104	97	
107				CONTROL	GREY	4.0mm	L35	MC		K201	98	MC		X7	3	
108				CONTROL	GREY	4.0mm	L35	MC		X7	3	MC		K202	98	
109				CONTROL	GREY	4.0mm	L35	MC		K202	98	MC		K203	98	
110				CONTROL	GREY	4.0mm	L35	MC		K203	98	MC		K204	98	
111				CONTROL	GREY	4.0mm	L37	MC		K201	97	MC		X7	4	
112				CONTROL	GREY	4.0mm	L37	MC		X7	4	MC		K202	97	
113				CONTROL	GREY	4.0mm	L37	MC		K202	97	MC		K203	97	
114				CONTROL	GREY	4.0mm	L37	MC		K203	97	MC		K204	97	
115				CONTROL	GREY	4.0mm	L39	MC		K153	11	MC		X7	5	
116				CONTROL	GREY	4.0mm	L41	MC		K153	12	MC		X7	6	
117				CONTROL	GREY	4.0mm	L43	MC		K154	11	MC		X7	7	
118				CONTROL	GREY	4.0mm	L45	MC		K154	12	MC		X7	8	
119				CONTROL	GREY	4.0mm	L47	MC		X7	9	MC		K170	7	
120				CONTROL	GREY	4.0mm	L49	MC		X7	10	MC		K170	6	
121				CONTROL	BROWN	4.0mm	M71	MC		Q23	1	MC		X12	6	
122				CONTROL	ORANGE	4.0mm	M72	MC		Q24	1	MC		X12	7	
123				CONTROL	YELLOW	4.0mm	M73	MC		Q25	1	MC		X12	8	
124				CONTROL	YELLOW	4.0mm	M73	MC		X12	8	MC		Q26	1	
125				CONTROL	YELLOW	4.0mm	M73	MC		Q26	1	MC		Q27	1	
126				CONTROL	BLACK	4.0mm	M74	MC		X23	B	MC		X24	B	
127				CONTROL	BLACK	4.0mm	M74	MC		X24	B	MC		X25	T	
128				CONTROL	BLACK	4.0mm	M74	MC		X25	T	MC		X26	T	
129				CONTROL	BLACK	4.0mm	M74	MC		X26	T	MC		EC24	E	
130				CONTROL	BLACK	4.0mm	M74	MC		EC24	E	MC		X12	9	
131				CONTROL	BLACK	4.0mm	M74	MC		X12	9	MC		Q27	2	
132				CONTROL	GREY	4.0mm	M81	MC		X13	7	MC		B2	1.12	
133				CONTROL	GREY	4.0mm	M81	MC		X4	3	MC		Q28	2	
134				CONTROL	GREY	4.0mm	M81	MC		X4	3	MC		X11	7	
135				CONTROL	GREY	4.0mm	M81	MC		X4	3	MC		X13	7	
136				CONTROL	GREY	4.0mm	M82	MC		K161	A2	MC		X28	B	
137				CONTROL	GREY	4.0mm	M83	MC		K161	A1	MC		X4	4	
138				CONTROL	GREY	4.0mm	M83	MC		X13	8	MC		B2	1.13	
139				CONTROL	GREY	4.0mm	M83	MC		X4	4	MC		X11	8	
140				CONTROL	GREY	4.0mm	M83	MC		X4	4	MC		X13	8	
141				CONTROL	GREY	4.0mm	M85	MC		Q29	2	MC		X4	6	
142				CONTROL	GREY	4.0mm	M85	MC		X13	10	MC		B2	1.15	
143				CONTROL	GREY	4.0mm	M85	MC		X4	6	MC		X11	10	
144				CONTROL	GREY	4.0mm	M85	MC		X4	6	MC		X13	10	
145				CONTROL	GREY	4.0mm	M86	MC		K162	A2	MC		X29	B	
146				CONTROL	GREY	4.0mm	M87	MC		K162	A1	MC		X4	7	
147				CONTROL	GREY	4.0mm	M87	MC		X13	11	MC		B2	1.16	
148				CONTROL	GREY	4.0mm	M87	MC		X4	7	MC		X11	11	
149				CONTROL	GREY	4.0mm	M87	MC		X4	7	MC		X13	11	
150				CONTROL	GREY	4.0mm	M88	MC		X30	B	MC		B2	1.2	

REVISION CONTROLLED COPY
MIRANT

© COPYRIGHT 2001
PEEBLES TRANSFORMERS LIMITED

THIS DRAWING IS CONFIDENTIAL AND IS THE PROPERTY OF PEEBLES TRANSFORMERS LIMITED AND IS NOT TO BE COPIED OR IN ANY WAY MADE USE OF WITHOUT THE EXPRESS PERMISSION OF THE PROPRIETORS.

REV	SIG & DATE	REV	SIG & DATE	REV	SIG & DATE	REV	SIG & DATE	REV	SIG & DATE	REV	SIG & DATE	REV	SIG & DATE	REV	SIG & DATE	REV	SIG & DATE

REVISIONS

DATE	15-08-2001
JOB No.	C00035_01
DRAWN	G. RUSSELL
CHECKED	F. O REILLY
APPROVED	F. O REILLY

Peebles Transformers Limited. Edinburgh, Scotland

PROJECT:- MIRANT CORPORATION - APEX PROJECT, NEVADA

MARSHALLING CUBICLE WIRING SCHEDULE (1-150)
FOR A 215 MVA., 525/18 kV., OA/FA/FA COOLED, 3 PHASE,
60 Hz., GENERATOR TRANSFORMER.

DRAWING No.	SHEET	CONT	REV	SCALE	DDSC
621430_C00035_01	15	16			A1

russelgr 16.08.2001 11:39:50 7828_15

REF	REV	CABLE	CORE	SEGREGATION GROUP	WIRE COLOUR	WIRE SIZE sq.mm	WIRE No.	ASSIGN	LOC	DEVICE REFERENCE	TERMINAL No.	ASSIGN	LOC	DEVICE REFERENCE	TERMINAL No.	SPARE
151				CONTROL	GREY	4.0mm	M89	MC		Q30	2	MC		B2	1.3	
152				CONTROL	G/Y	4.0mm	M90	MC		EC6	E	MC		K170	13	
153				CONTROL	G/Y	4.0mm	M90	MC		EC9	E	MC		B2	1.1	
154				CONTROL	GREY	4.0mm	M91	MC		Q31	2	MC		K170	12	
155				CONTROL	GREY	4.0mm	M91	MC		K170	12	MC		X4	9	
156				CONTROL	GREY	4.0mm	M92	MC		X31	B	MC		K170	11	
157				CONTROL	GREY	4.0mm	M95	MC		X4	10	MC		K170	1	
158				CONTROL	GREY	4.0mm	M97	MC		X4	11	MC		K170	2	
159				CONTROL	BROWN	4.0mm	M111	MC		K151	14	MC		Q23	2	
160				CONTROL	BROWN	4.0mm	M111	MC		Q23	2	MC		S101	LA2	
161				CONTROL	BROWN	4.0mm	M111	MC		S101	LA2	MC		S101	LA1	
162				CONTROL	BROWN	4.0mm	M113	MC		S3	LA	MC		S101	2A	
163				CONTROL	BROWN	4.0mm	M114	MC		S101	1A	MC		S102	LA1	
164				CONTROL	BROWN	4.0mm	M114	MC		S102	LA1	MC		S102	LA2	
165				CONTROL	BROWN	4.0mm	M115	MC		K101	A1	MC		S3	1A	
166				CONTROL	BROWN	4.0mm	M115	MC		S3	1A	MC		K102	A1	
167				CONTROL	BROWN	4.0mm	M115	MC		K102	A1	MC		K103	A1	
168				CONTROL	BROWN	4.0mm	M115	MC		K103	A1	MC		K104	A1	
169				CONTROL	BROWN	4.0mm	M115	MC		K104	A1	MC		K161	14	
170				CONTROL	BROWN	4.0mm	M115	MC		K161	14	MC		K162	14	
171				CONTROL	BROWN	4.0mm	M116	MC		K161	13	MC		S102	1A	
172				CONTROL	BROWN	4.0mm	M117	MC		K162	13	MC		S102	2A	
173				CONTROL	BROWN	4.0mm	M118	MC		K153	L	MC		K151	11	
174				CONTROL	BLACK	4.0mm	M119	MC		K101	A2	MC		K102	A2	
175				CONTROL	BLACK	4.0mm	M119	MC		K102	A2	MC		K103	A2	
176				CONTROL	BLACK	4.0mm	M119	MC		K103	A2	MC		K104	A2	
177				CONTROL	BLACK	4.0mm	M119	MC		K104	A2	MC		K153	N	
178				CONTROL	BLACK	4.0mm	M119	MC		K153	N	MC		X23	T	
179				POWER	BROWN	4.0mm	M171	MC		K101	2	MC		X9	1	
180				POWER	ORANGE	4.0mm	M172	MC		K101	4	MC		X9	2	
181				POWER	YELLOW	4.0mm	M173	MC		K101	6	MC		X9	3	
182				POWER	BROWN	4.0mm	M174	MC		K102	2	MC		X9	4	
183				POWER	ORANGE	4.0mm	M175	MC		K102	4	MC		X9	5	
184				POWER	YELLOW	4.0mm	M176	MC		K102	6	MC		X9	6	
185				POWER	BROWN	4.0mm	M177	MC		K103	2	MC		X9	7	
186				POWER	ORANGE	4.0mm	M178	MC		K103	4	MC		X9	8	
187				POWER	YELLOW	4.0mm	M179	MC		K103	6	MC		X9	9	
188				POWER	BROWN	4.0mm	M180	MC		K104	2	MC		X9	10	
189				POWER	ORANGE	4.0mm	M181	MC		K104	4	MC		X9	11	
190				POWER	YELLOW	4.0mm	M182	MC		K104	6	MC		X9	12	
191				CONTROL	ORANGE	4.0mm	M211	MC		K152	14	MC		Q24	2	
192				CONTROL	ORANGE	4.0mm	M211	MC		Q24	2	MC		S101	LB2	
193				CONTROL	ORANGE	4.0mm	M211	MC		S101	LB2	MC		S101	LB1	
194				CONTROL	ORANGE	4.0mm	M213	MC		S4	LA	MC		S101	2B	
195				CONTROL	ORANGE	4.0mm	M214	MC		S101	1B	MC		S102	LB2	
196				CONTROL	ORANGE	4.0mm	M214	MC		S102	LB2	MC		S102	LB1	
197				CONTROL	ORANGE	4.0mm	M215	MC		K161	24	MC		K162	24	
198				CONTROL	ORANGE	4.0mm	M215	MC		K162	24	MC		K201	A1	
199				CONTROL	ORANGE	4.0mm	M215	MC		K201	A1	MC		S4	1A	
200				CONTROL	ORANGE	4.0mm	M215	MC		S4	1A	MC		K202	A1	
201				CONTROL	ORANGE	4.0mm	M215	MC		K202	A1	MC		K203	A1	
202				CONTROL	ORANGE	4.0mm	M215	MC		K203	A1	MC		K204	A1	
203				CONTROL	YELLOW	4.0mm	M216	MC		K161	23	MC		S102	2B	
204				CONTROL	YELLOW	4.0mm	M217	MC		K162	23	MC		S102	1B	
205				CONTROL	ORANGE	4.0mm	M218	MC		K154	L	MC		K152	11	
206				CONTROL	BLACK	4.0mm	M219	MC		K154	N	MC		X24	T	
207				CONTROL	BLACK	4.0mm	M219	MC		X24	T	MC		K201	A2	
208				CONTROL	BLACK	4.0mm	M219	MC		K201	A2	MC		K202	A2	
209				CONTROL	BLACK	4.0mm	M219	MC		K202	A2	MC		K203	A2	
210				CONTROL	BLACK	4.0mm	M219	MC		K203	A2	MC		K204	A2	
211				POWER	BROWN	4.0mm	M271	MC		K201	2	MC		X10	1	
212				POWER	ORANGE	4.0mm	M272	MC		K201	4	MC		X10	2	
213				POWER	YELLOW	4.0mm	M273	MC		K201	6	MC		X10	3	
214				POWER	BROWN	4.0mm	M274	MC		K202	2	MC		X10	4	
215				POWER	ORANGE	4.0mm	M275	MC		K202	4	MC		X10	5	
216				POWER	YELLOW	4.0mm	M276	MC		K202	6	MC		X10	6	
217				POWER	BROWN	4.0mm	M277	MC		K203	2	MC		X10	7	
218				POWER	ORANGE	4.0mm	M278	MC		K203	4	MC		X10	8	
219				POWER	YELLOW	4.0mm	M279	MC		K203	6	MC		X10	9	
220				POWER	BROWN	4.0mm	M280	MC		K204	2	MC		X10	10	
221				POWER	ORANGE	4.0mm	M281	MC		K204	4	MC		X10	11	
222				POWER	YELLOW	4.0mm	M282	MC		K204	6	MC		X10	12	

REVISION CONTROLLED COPY

CONVERSION TABLE FOR WIRING

4 mm	12 A.W.G.
6 mm	10 A.W.G.

© COPYRIGHT 2001
PEEBLES TRANSFORMERS LIMITED

THIS DRAWING IS CONFIDENTIAL AND IS THE PROPERTY OF PEEBLES TRANSFORMERS LIMITED AND IS NOT TO BE COPIED OR IN ANY WAY MADE USE OF WITHOUT THE EXPRESS PERMISSION OF THE PROPRIETORS.

REV	SIG & DATE	REV	SIG & DATE	REV	SIG & DATE	REV	SIG & DATE	REV	SIG & DATE	REV	SIG & DATE	REV	SIG & DATE	REV	SIG & DATE	REV	SIG & DATE

REVISIONS

DATE	15-08-2001
JOB No.	C00035_01
DRAWN	G. RUSSELL
CHECKED	F. O REILLY
APPROVED	F. O REILLY

Peebles Transformers Limited. Edinburgh. Scotland

PROJECT:- MIRANT CORPORATION - APEX PROJECT, NEVADA

MARSHALLING CUBICLE WIRING SCHEDULE (151-222)
FOR A 215 MVA., 525/18 kV., OA/FA/FA COOLED, 3 PHASE,
60 Hz., GENERATOR TRANSFORMER.

DRAWING No.	SHEET	CONT	REV	SCALE	DDSC
621430_C00035_01	16				A1

russelgr 16.08.2001 11:39:50 7828_16